# V951L Series

Max. tensile strength 2.300 N, working load max 1.550 N, see footnotes.
Adjustable drawhook
Available with secondary lock and hasp

| Style | Dimensions | Materials / Finish | Mounting Type[1] | D | L | Part No. |
|---|---|---|---|---|---|---|
| **Open base** 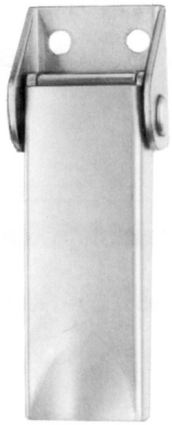 | 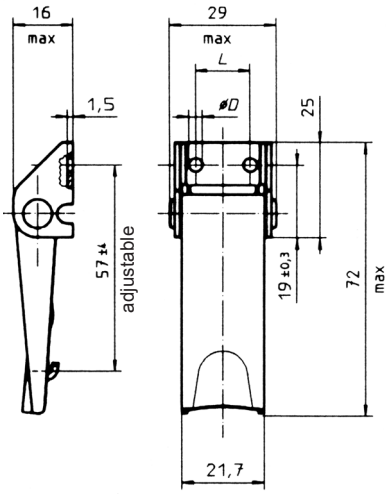  | Steel / zinc-plated, CrVI-free, clear passivation [2] | N | 3,6 | 14,3 | **V951L02-1-1AGV** |
| | | Steel / zinc-plated, CrVI-free, clear passivation [2] | N | 4,2 | 12,7 | **V951L02-1-5AGV** |
| | | Steel / zinc-plated, CrVI-free, clear passivation Base: Steel / zinc-plated [2] | S | - | - | **V951L02-1-2AGV** |
| | | Steel / chrome-plated Interior parts: Steel / zinc-plated, CrVI-free, clear passivation [2] | N | 3,6 | 14,3 | **V951L02-1-1AD** |
| | | Stainless steel [3] | N | 3,6 | 14,3 | **V951L02-1-1BP** |
| | | Stainless steel [3] | N | 4,2 | 12,7 | **V951L02-1-5BP** |
| | | Stainless steel [3] | S | - | - | **V951L02-1-2BP** |
| **Concealed base [4]** 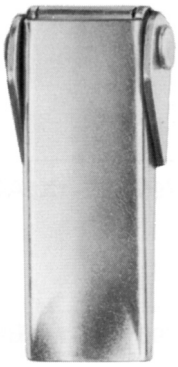 | 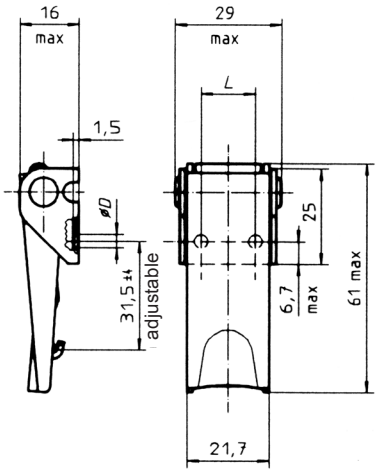  | Steel / zinc-plated, CrVI-free, clear passivation | N | 3,6 | 14,3 | **V951L03-1-1AGV** |
| | | Steel / zinc-plated, CrVI-free, clear passivation | N | 4,2 | 12,7 | **V951L03-1-5AGV** |
| | | Steel / chrome-plated Interior parts: Steel / zinc-plated, CrVI-free, clear passivation | N | 3,6 | 14,3 | **V951L03-1-1AD** |
| | | Stainless steel | N | 3,6 | 14,3 | **V951L03-1-1BP** |
| | | Stainless steel | N | 4,2 | 12,7 | **V951L03-1-5BP** |

[1] Mounting type: N = With holes for riveting or screw fixing
S = Without holes, for welding

[2] Max. tensile strength: 2.300 N with V951L07-*A* and V951L52-1A* strike, working load 1.550 N.
2.000 N with V951L50-1A* strike, working load 1.300 N.

[3] Max. tensile strength: 1.500 N with V951L07-*BP and V951L52-1BP strike, working load 1.000 N.

[4] Due to the mounting geometry, tensile strength reduced to approx. 1200 N, working load 800 N.


© 2020 Howmet Aerospace Inc.

| Style | Dimensions | Materials / Finish | Mounting Type[1)] | D | L | Part No. |
|---|---|---|---|---|---|---|
| **Secondary lock, open base** 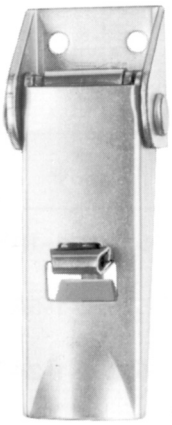 | 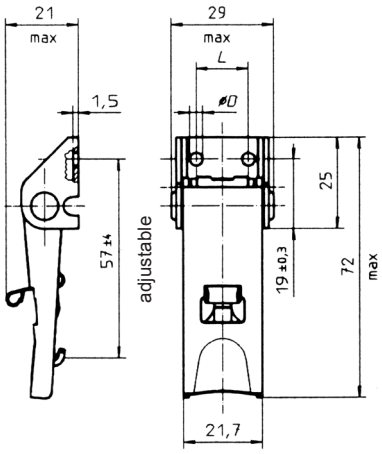  | Steel / zinc-plated, CrVI-free, clear passivation [2)] | N | 3,6 | 14,3 | **V951L04-1X1AGV** |
| | | Steel / zinc-plated, CrVI-free, clear passivation [2)] | N | 4,2 | 12,7 | **V951L04-1X5AGV** |
| | | Steel / chrome-plated Interior parts: Steel / zinc-plated, CrVI-free, clear passivation Secondary lock: Stainless steel | N | 3,6 | 14,3 | **V951L04-1X1AD** |
| | | Stainless steel [3)] | N | 3,6 | 14,3 | **V951L04-1X1BP** |
| | | Stainless steel [3)] | N | 4,2 | 12,7 | **V951L04-1X5BP** |
| | | Stainless steel [3)] | S | - | - | **V951L04-1X2BP** |
| **Secondary lock, concealed base [4)]** | 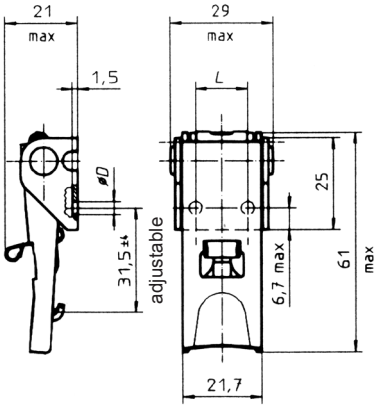  | Steel / zinc-plated, CrVI-free, clear passivation | N | 4,2 | 12,7 | **V951L03-1X5AGV** |
| | | Steel / chrome-plated Interior parts: Steel / zinc-plated, CrVI-free, clear passivation Secondary lock: Stainless steel | N | 3,6 | 14,3 | **V951L03-1X1AD** |
| | | Stainless steel | N | 3,6 | 14,3 | **V951L03-1X1BP** |
| | | Stainless steel | N | 4,2 | 12,7 | **V951L03-1X5BP** |

For footnotes refer to page F-1.


HOWMET AEROSPACE
Release date 1st April 2020.
© 2020 Howmet Aerospace Inc.

| Style | Dimensions | Materials / Finish | Mounting Type[1)] | D | Part No. |
|---|---|---|---|---|---|
| **Secondary lock, high base** | 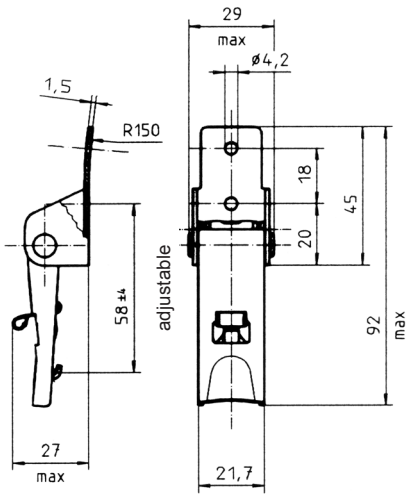  | Steel / zinc-plated, CrVI-free, clear passivation Secondary lock: Stainless steel [2)] | N | 4,2 | **V951L05-1X1AGV** |
| | | Stainless steel [3)] | N | 4,2 | **V951L05-1X1BP** |
| **Hasp** 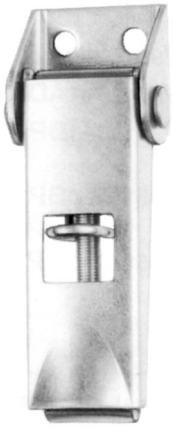 | 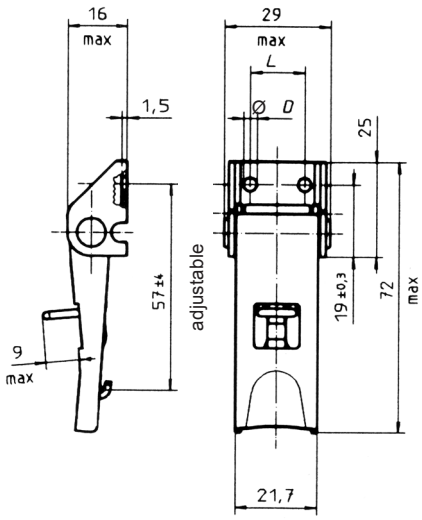  Hasp for Padlock Ø 6 max. | Steel / zinc-plated, CrVI-free, clear passivation [2)] Base: Steel / zinc-plated | S | - | **V951L01-1Y2AGV** |
| | | Steel / zinc-plated, CrVI-free, clear passivation [2)] | N | 4,2 | **V951L01-1Y5AGV** |

For footnotes refer to page F-1.


© 2020 Howmet Aerospace Inc.

| Style | Dimensions | Materials / Finish | Mounting Type[1] | D | Part No. |
|---|---|---|---|---|---|
| **Open** 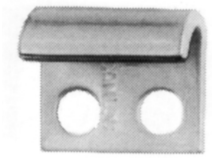 | 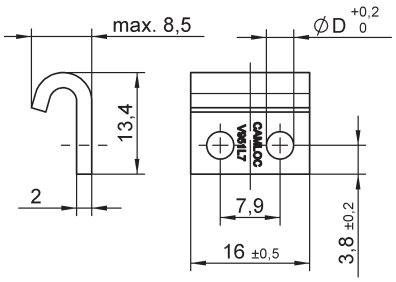  | Steel / zinc-plated, CrVI-free, clear passivation | N | 3,6 | **V951L7-1AGV** |
| | | Steel / zinc-plated, CrVI-free, clear passivation | N | 4,2 | **V951L7-5AGV** |
| | | Steel / zinc-plated | S [2] | - | **V951L7-2AZ** |
| | | Steel / chrome-plated | N | 3,6 | **V951L7-1AD** |
| | | Stainless steel | N | 3,6 | **V951L7-1BP** |
| | | Stainless steel | N | 4,2 | **V951L7-5BP** |
| | | Stainless steel | S | - | **V951L7-2BP** |
| **Closed** 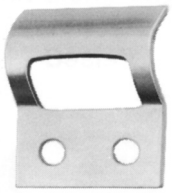 | 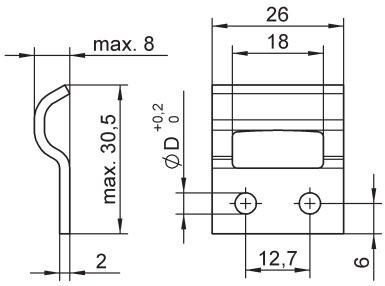  | Steel / zinc-plated, CrVI-free, clear passivation | N | 4,2 | **V951L50-1AGV** |
| | | Stainless steel | N | 4,2 | **V951L50-1BP** |
| | | Stainless steel | N | 3,6 | **V951L50-2BP** |
| | | Stainless steel | S | - | **V951L50-3BP** |
| **Corner mounting** | 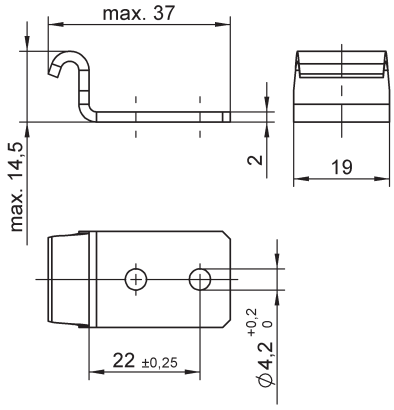  | Steel / zinc-plated, CrVI-free, clear passivation | N | 4,2 | **V951L52-1AGV** |
| | | Stainless steel | N | 4,2 | **V951L52-1BP** |

[1] Mounting type: N = With holes for riveting or screw fixing
S = Without holes, for welding

[2] Material C45, HRC 36-39 steel, please use high-alloy filler welding rods



HOWMET AEROSPACE
Release date 1st April 2020.
© 2020 Howmet Aerospace Inc.

| Product | Dimensions | Materials / Finish | Mounting Type | D | Part No. |
|---|---|---|---|---|---|
| **wide Version** | 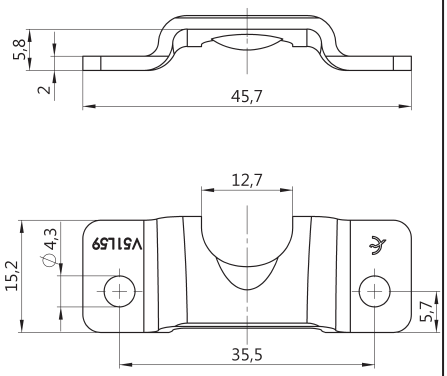  | zinc-nickel plated transparent, CrVI-free passivated and sealed | N | 4,3 | **V51L59-1ASNV** |

1) Befestigung: N = mit Bohrungen zum Nieten bzw. Schrauben
S = ohne Bohrungen zum Schweißen

2) Werkstoff: Stahl C45, HRC 36-39, bitte hochlegierte Schweißzusatzwerkstoffe verwenden.

## Accessories

| Dimensions | Material / Finish | Hole Distance L | D | Part No. |
|---|---|---|---|---|
| **Lift Spring** 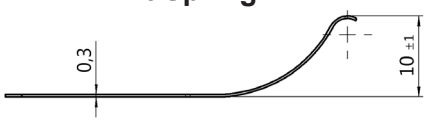  | stainless steel / passivated | 14,3 | 5,0 | **V951L61-4BP** |
| 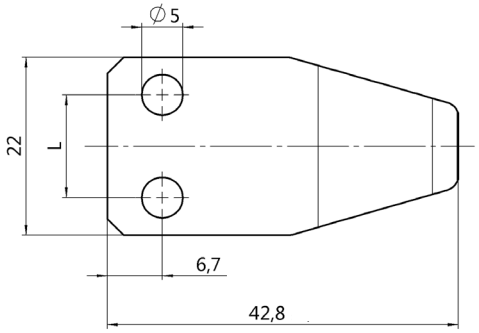  This lift spring can only be used in combination with latches of V951L series with open base. | stainless steel / passivated | 12,7 | 5,0 | **V951L61-5BP** |


© 2020 Howmet Aerospace Inc.

Dimensions

**Open-base tension latch / open strike**

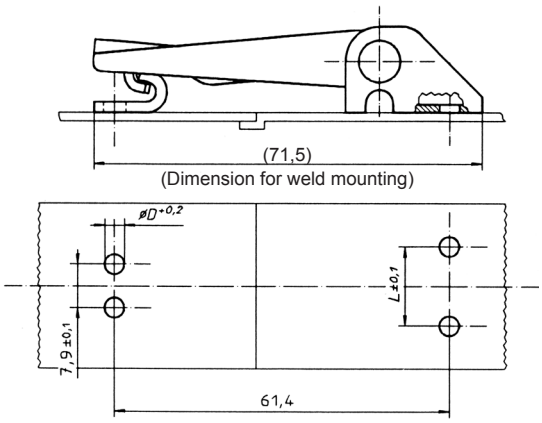


**V951L02-***
**V951L04-***
**V951L01-***

**V951L7-***

Select diameter D and distance L in accordance with the strike and tension latch style.

**Concealed-base tension latch / open strike**

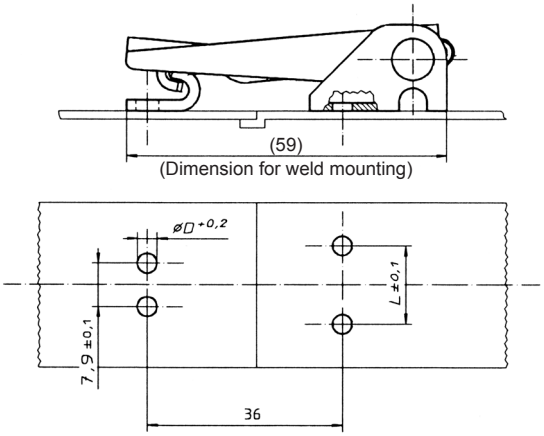


**V951L03-***

**V951L7-***

Select diameter D and distance L in accordance with the strike and tension latch style.

**Open-base tension latch / closed strike**

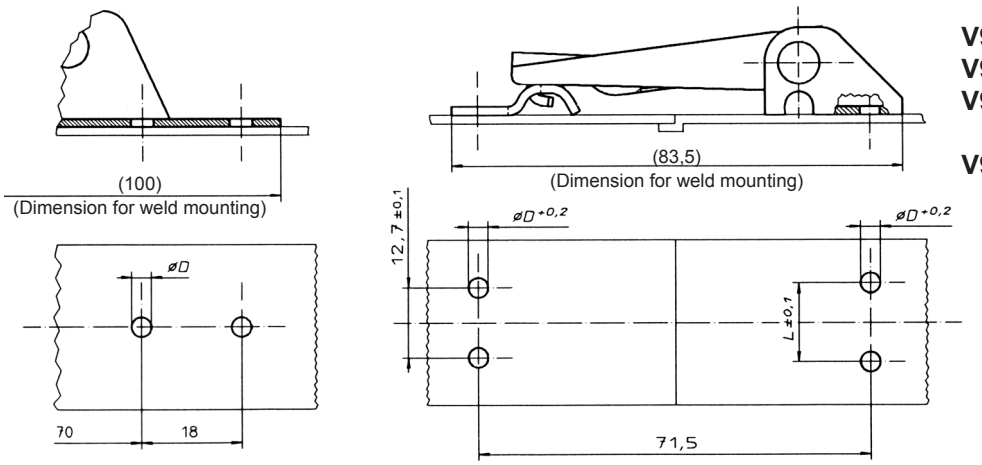


**V951L05-**

**V951L02-***
**V951L04-***
**V951L01-***

**V951L50-***

Select diameter D and distance L in accordance with the strike and tension latch style.



HOWMET AEROSPACE

Release date 1st April 2020.
© 2020 Howmet Aerospace Inc.

Dimensions

**Concealed-base tension latch / closed strike**

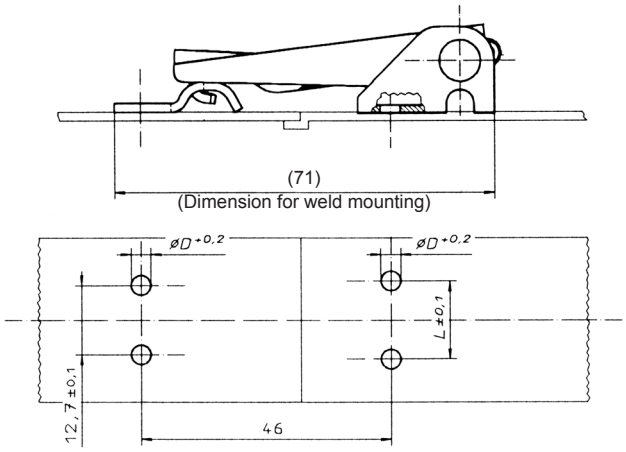


**V951L03-***

**V951L50-***

Select diameter D and distance L in accordance with the strike and tension latch style.

**Open-base tension latch / corner-mounting strike**

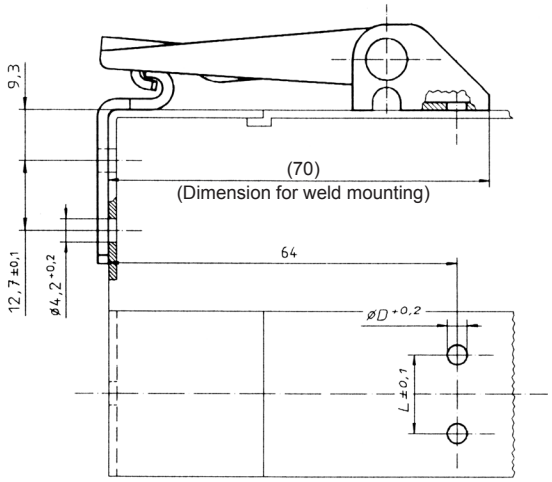


**V951L02-***
**V951L04-***
**V951L01-***

**V951L52-***

Select diameter D and distance L in accordance with the strike and tension latch style.

**Concealed-base tension latch / corner-mounting strike**

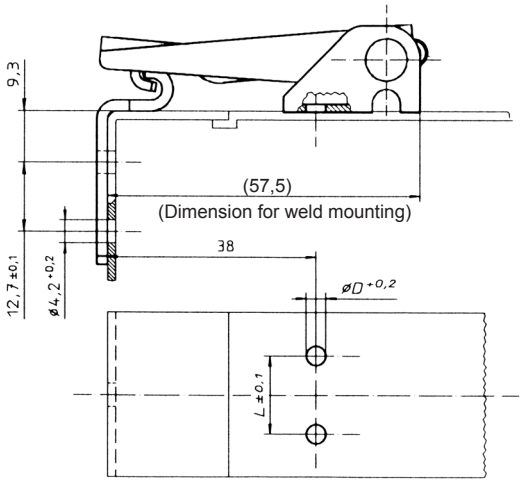


**V951L03-***

**V951L52-***

Select diameter D and distance L in accordance with the strike and tension latch style.


© 2020 Howmet Aerospace Inc.

## Dimensions

### Open-base tension latch / wide strike

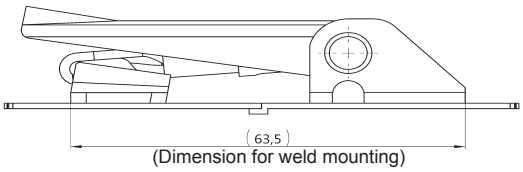


**V951L01-***
**V951L02-***
**V951L04-***

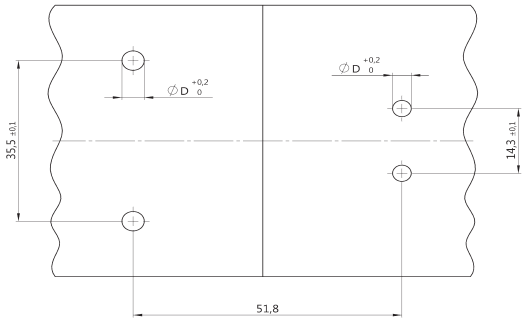


**V51L59-***

Select diameter D and distance L in accordance with the strike and tension latch style.

### Concealed-base tension latch / wide strike

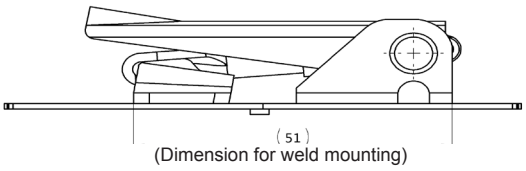


**V951L03-***

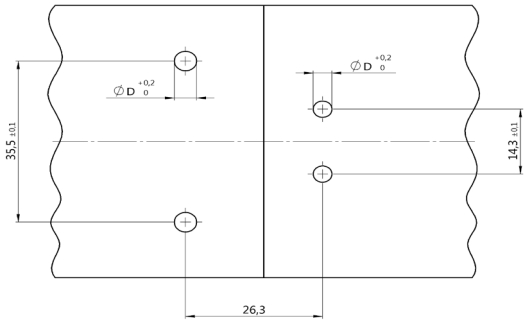


**V951L59-***

Select diameter D and distance L in accordance with the strike and tension latch style.



HOWMET AEROSPACE
Release date 1st April 2020.
© 2020 Howmet Aerospace Inc.