Eddie-Bolt® 2 fastener tools

April 17, 2024

Eddie-Bolt® 2 fastener tools

Table of Contents

Power Installation Tools	Section 1
Accessories For Power Tools	Section 2
Hand Installation Tools	Section 3
Removal Tools	Section 4
Inspection Gauges	Section 5

SECTION 1

Power Installation Tools

HOWMET AEROSPACE

INSTALLATION SEQUENCE

Tools with a center Spline-Lok™ key, or a hex key, shall be used to keep the pin from rotating when installed in clearance fit, close ream, or transition fit holes. Place the Delta-Rad™ installation tool firmly down over the nut ensuring that the key is engaged in the recess of the pin. The installation tool must be engaged over the lobes of the nut and bottomed out on the base of the nut. Maintain perpendicularity between the drive tool and the fastener. When the installation tool becomes free running on the nut, the lobes have been swaged into and across the flutes of the pin and the installation is complete. Remove and replace the pin and nut if the pin spins during the nut installation. If swaging of the nut is incomplete, re-swaging is not permitted. If a nut is found incompletely swaged, remove and replace both the nut and pin. It is not required to have the chamfer of the pin protruding through the nut. The end of the pin may be flush with the top of the nut provided pin protrusion is acceptable.

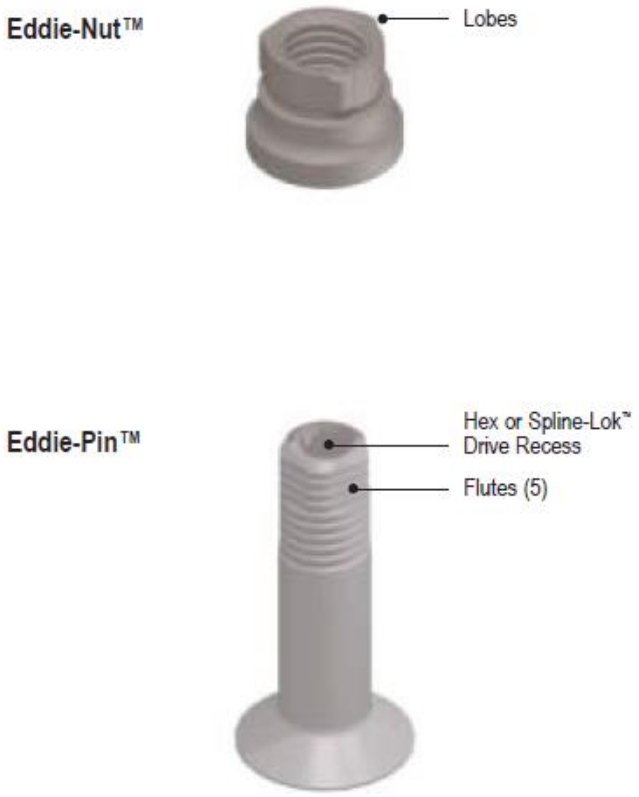

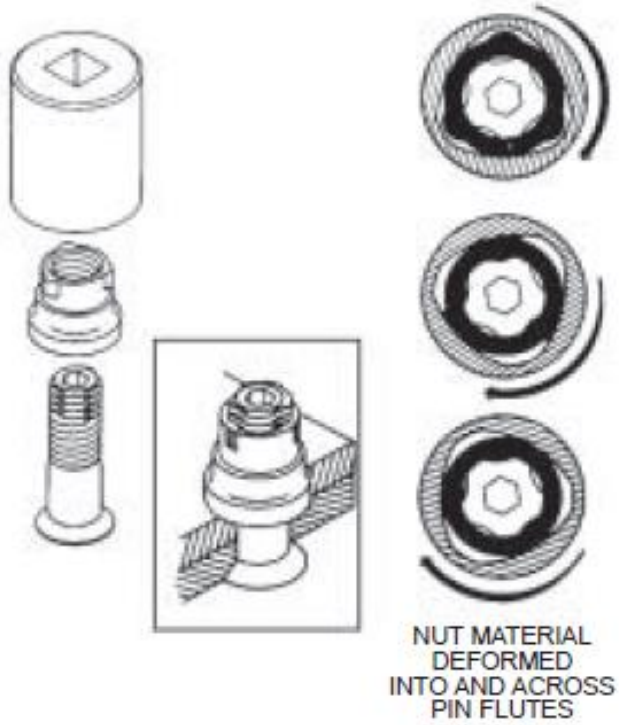

FINISHED INSTALLATION

Howmet Fastening Systems (HFS) only guarantees system performances when genuine HFS Eddie-Bolt® components are used in combination with other genuine HFS hardware and are installed using HFS tooling. HFS expressly does not guarantee system performance, and disclaims any and all liability, when: (a) fasteners and/or components from an unlicensed source are used in combination with HFS fasteners and/or components; and/or (b) HFS fasteners are installed without HFS tooling.

Offset Pistol Grip Tools

Smallest Package, Increased Power !

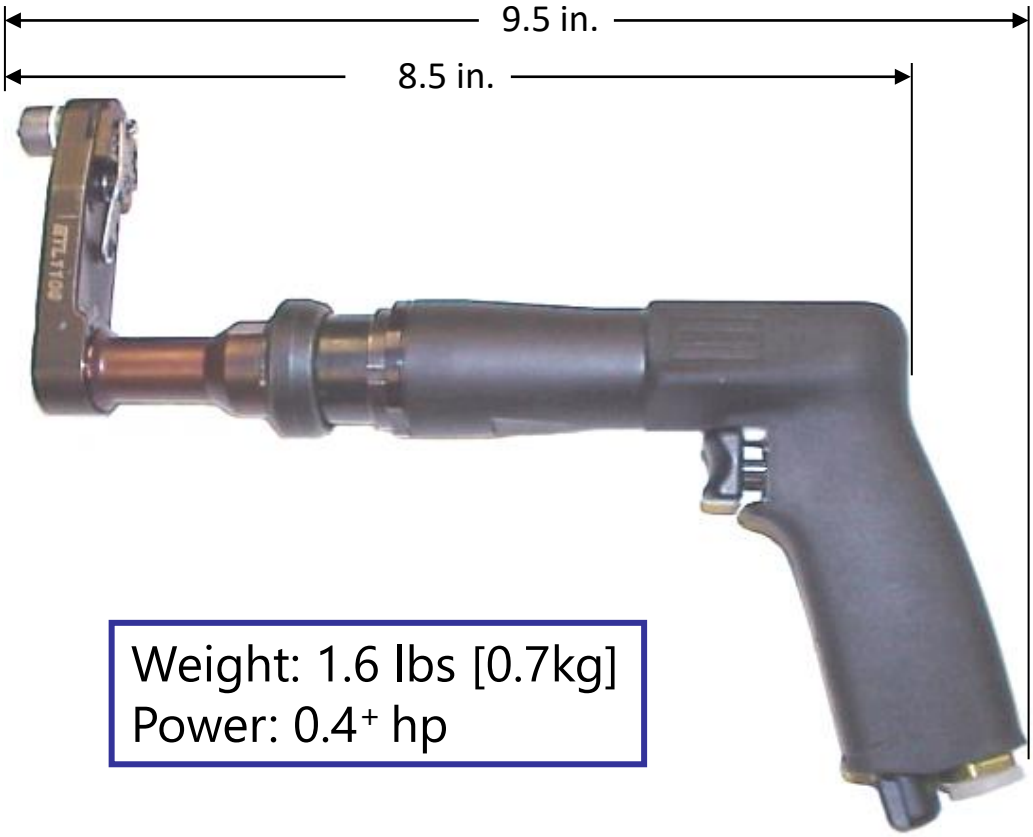

Weight: 1.6 lbs [0.7kg]
Power: 0.4+ hp

Example Shown Above: ETL1129C06D06SPK

Note: This is the new pistol grip motor available in the following tool models for all -5, -6 & -8 diameters:

- ETL1108
- ETL1129
- ETL1110
- ETL1111
- ETL2000

Offset Pistol Grip Tools

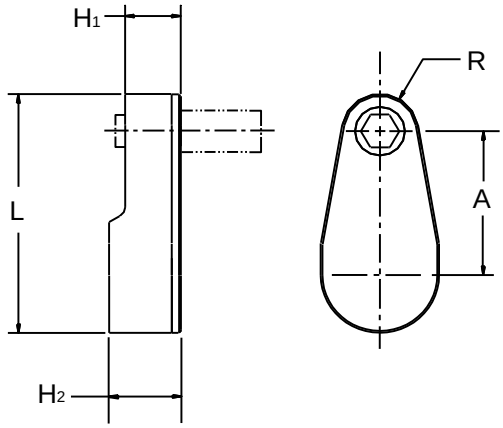

Model Number	No. of Gears	A	H_1	H_2	L	R
ETL1108	3	1.27 [32.3mm]	.47 [11.9mm]	.61 [15.4mm]	2.12 [53.8mm]	.35 [8.9mm]
ETL1110	3	1.33 [33.8mm]	.47 [11.9mm]	.61 [15.4mm]	2.26 [57.4mm]	.43 [10.8mm]

Model ET1108 flush socket gears available in 05 & 06 diameters only.
Model ET1110 is designed for use with a flush socket gear up to the 08 dia.

Table 1
Fastener Diameter

Dash	Diameter
05	5/32"
06	3/16"
08	1/4"

Table 2
Ext'd.Socket Length
(Table 1, Accessories)

Code	Extension
A	Flush
D	0.5"
G	1.0"
J	2.0"
L	3.0"

Table 3
Spline Keys
(See Table 5, Accessories)

Code	Size
05SPK	5/32" Dia. Spline Bit
06SPK	3/16" Dia. Spline Bit
08SPK	1/4" Dia. Spline Bit

Table 4
Drive Shaft Extended Length

Code	Length	Index Unit
A	-	With
B	-	Without
C	2.0"	With
D	2.0"	Without
G	6.0"	With
H	6.0"	Without

Example of Complete Tool Model Number:

ETL1110 C 08 A 08SPK

- 08SPK — Spline Key Size(Table 3)
- A — Extended Socket Length (Table 2)
- 08 — Fastener Diameter (Table 1)
- C — Ext'd. Drive Shaft (Table 4)
- ETL1110 — Tool Model Number

HOWMET AEROSPACE

Offset Pistol Grip Tools

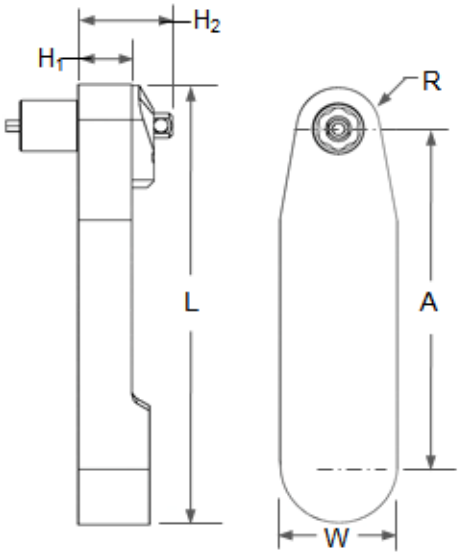

Model Number	No. of Gears	A	H_1	H_2	L	W	R
ETL1129	5	2.68" [68.1mm]	.47" [11.9mm]	.61" [15.4mm]	3.53" [89.7mm]	1.0" [25.4mm]	.35" [8.9mm]

- Model ETL1129 is designed for installation of -5, -6, -8 diameter fasteners with use of extended sockets.
- Model ETL1129 has the capability for flush socket gears on 05 & 06 diameters only

Table 1
Fastener Diameter

Dash	Diameter
05	5/32"
06	3/16"
08	1/4"

Table 2
Ext'd.Socket Length
(Table 1, Accessories)

Code	Extension
A	Flush
D	0.5"
G	1.0"
J	2.0"
L	3.0"

Table 3
Spline Keys
(See Table 5, Accessories)

Code	Size
05SPK	5/32" Dia. Spline Bit
06SPK	3/16" Dia. Spline Bit
08SPK	1/4" Dia. Spline Bit

Table 4
Drive Shaft Extended Length

Code	Length	Index Unit
A	-	With
B	-	Without
C	2.0"	With
D	2.0"	Without
G	6.0"	With
H	6.0"	Without

Example of Complete Tool Model Number:

ETL1129 C 08 D 08SPK

- 08SPK — Spline Key Size(Table 3)
- D — Extended Socket Length (Table 2)
- 08 — Fastener Diameter (Table 1)
- C — Ext'd. Drive Shaft (Table 4)
- ETL1129 — Tool Model Number

HOWMET AEROSPACE

Offset Pistol Grip Tools

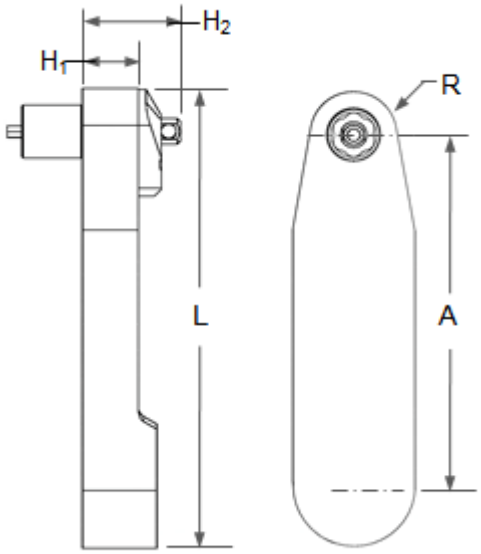

Model Number	No. of Gears	A	H_1	H_2	L	R
ETL1111	5	2.75 [69.9mm]	.37 [9.4mm]	.61 [15.4mm]	3.68 [93.3mm]	.43 [10.8mm]

Table 1
Fastener Diameter

Dash	Diameter
05	5/32"
06	3/16"

Table 2
Ext'd.Socket Length
(Table 1, Accessories)

Code	Extension
A	Flush
D	0.5"
G	1.0"
J	2.0"
L	3.0"

Table 3
Spline Keys
(See Table 5, Accessories)

Code	Size
05SPK	5/32" Dia. Spline Bit
06SPK	3/16" Dia. Spline Bit
08SPK	1/4" Dia. Spline Bit

Table 4
Drive Shaft Extended Length

Code	Length	Index Unit
A	-	With
B	-	Without
C	2.0"	With
D	2.0"	Without
G	6.0"	With
H	6.0"	Without

Example of Complete Tool Model Number:

ETL1111 C 08 A 08SPK

- 08SPK — Spline Key Size(Table 3)
- A — Extended Socket Length (Table 2)
- 08 — Fastener Diameter (Table 1)
- C — Ext'd. Drive Shaft (Table 4)
- ETL1111 — Tool Model Number

HOWMET AEROSPACE

Offset Pistol Grip Tools

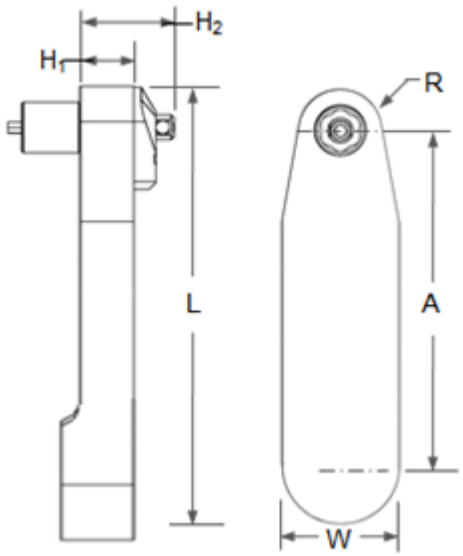

Model Number	No. of Gears	A	H_1	H_2	L	R	W
ETL1115	6	3.38 [85.9mm]	.47 [11.9mm]	.61 [15.4mm]	4.20 [106.7mm]	.32 [8.2mm]	1.0 [25.4mm]

Table 1
Fastener Diameter

Dash	Dia.
05	5/32"
06	3/16"

Table 2
Ext'd. Socket Length

Dia.	Code	Socket Length	Socket Number
-05	D	1/2"	463-9051
	G	1.0"	463-9052
	J	2.0"	463-9054
	L	3.0"	463-9056
-06	D	1/2"	463-9061
	G	1.0"	463-9062
	J	2.0"	463-9064
	L	3.0"	463-9066

Table 3
Spline Bits
(See Table 5, Accessories)

Code	Size
05SPK	5/32" Dia. SPK Bit
06SPK	3/16" Dia. SPK Bit

Table 4
Drive Shaft Extended Length

Code	Length	Index Unit
C	2.0"	With
D	2.0"	Without
G	6.0"	With
H	6.0"	Without

Example of Complete Tool Model Number:

ETL1115 C 06 D 06SPK

- 06SPK — Spline Key Size(Table 3)
- D — Extended Socket Length (Table 2)
- 06 — Fastener Diameter (Table 1)
- C — Ext'd. Drive Shaft (Table 4)
- ETL1115 — Tool Model Number

Offset Pistol Grip Tools

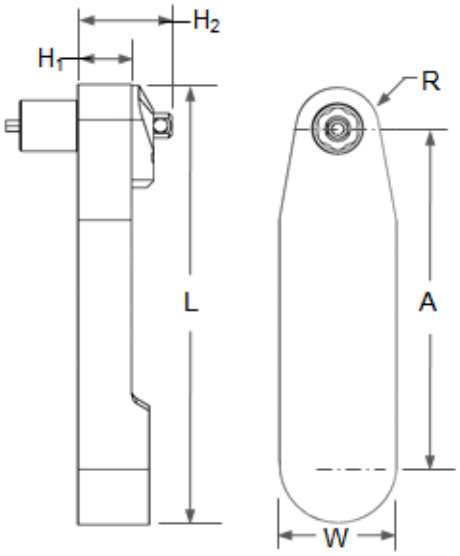

Model Number	No. of Gears	A	H_1	H_2	L	R	W
ET1115	6	3.38 [85.9mm]	.47 [11.9mm]	.61 [15.4mm]	4.20 [106.7mm]	.32 [8.2mm]	1.0 [25.4mm]

Table 1
Fastener Diameter

Dash	Dia.
08	1/4"

Table 2
Ext'd. Socket Length

Dia.	Code	Socket Length	Socket Number
-08	D	1/2"	463-9021
	G	1.0"	463-9022
	J	2.0"	463-9024
	L	3.0"	463-9026

Table 3
Spline Bits
(See Table 5, Accessories)

Code	Size
08SPK	1/4" Dia. SPK Bit

Table 4
Drive Shaft Extended Length

Code	Length	Index Unit
C	2.0"	With
D	2.0"	Without
G	6.0"	With
H	6.0"	Without

Example of Complete Tool Model Number:

ET1115 C 08 D 08SPK

- 08SPK — Spline Key Size(Table 3)
- D — Extended Socket Length (Table 2)
- 08 — Fastener Diameter (Table 1)
- C — Ext'd. Drive Shaft (Table 4)
- ET1115 — Tool Model Number

Offset Pistol Grip Tools

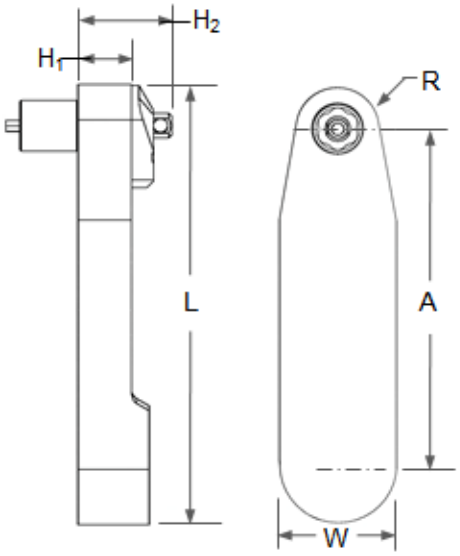

Model Number	No. of Gears	A	H_1	H_2	L	W	R
ETL1117	6	3.39" [86.1mm]	.47" [11.9mm]	.61" [15.4mm]	4.24" [107.7mm	1.0" [25.4mm]	.35" [8.9mm]

Table 1
Fastener Diameter

Dash	Diameter
05	5/32"
06	3/16"
08	1/4"

Table 2
*Ext'd.Socket Length
(Table 1, Accessories)

Code	Extension
D	0.5"
G	1.0"
J	2.0"
L	3.0"

Table 3
Spline Keys
(See Table 5, Accessories)

Code	Size
05SPK	5/32" Dia. Spline Bit
06SPK	3/16" Dia. Spline Bit
08 SPK	1/4" Dio Spline Bit

Table 4
Drive Shaft Extended Length

Code	Length	Index Unit
A	-	With
B	-	Without
C	2.0"	With
D	2.0"	Without
G	6.0"	With
H	6.0"	Without

*Not available in a Flush Socket Tool

Example of Complete Tool Model Number:

ETL1117 C 06 D 06SPK

- 06SPK — Spline Key Size(Table 3)
- D — Extended Socket Length (Table 2)
- 06 — Fastener Diameter (Table 1)
- C — Ext'd. Drive Shaft (Table 4)
- ETL1117 — Tool Model Number

Offset Pistol Grip Tools

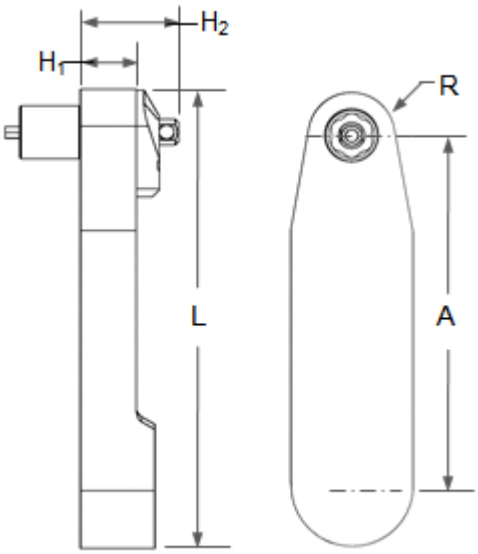

Model Number	No. of Gears	A	H_1	H_2	L	R
ET1020	5	3.38 [85.9mm]	.68 [17.3mm]	1.28 [32.5mm]	4.44 [113.0mm]	.50 [12.7mm]

The above tool model is designed for use with a flush socket gear or extended sockets

Table 1
Fastener Diameter

Dash	Diameter
10	5/16"

Table 2
Ext'd.Socket Length
(Table 2, Accessories)

Code	Extension
A	Flush
E	5/8"
G	1.0"
J	2.0"
L	3.0"

Table 3
Spline Keys
(See Table 5, Accessories)

Code	Size
10SPK	5/16" Dia. Spline Bit

Table 4
Drive Shaft Extended Length

Code	Length	Index Unit
A	-	With
B	-	Without
C	2.0"	With
D	2.0"	Without
G	6.0"	With
H	6.0"	Without

Example of Complete Tool Model Number:

ET1020 C 10 G 10SPK

- 10SPK — Spline Key Size(Table 3)
- G — Extended Socket Length (Table 2)
- 10 — Fastener Diameter (Table 1)
- C — Ext'd. Drive Shaft (Table 4)
- ET1020 — Tool Model Number

Offset Pistol Grip Tools

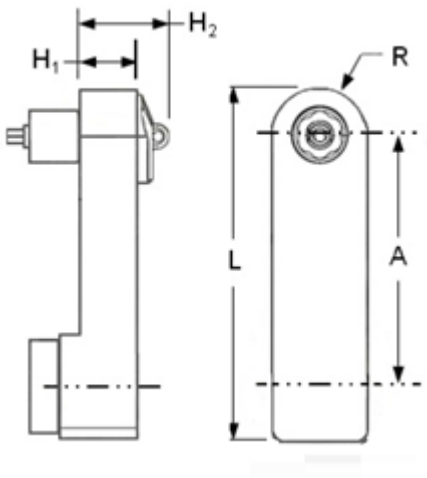

Model Number	No. of Gears	A	H_1	H_2	L	R
ET1060	6	4.16 [105.7mm]	.68 [17.3mm]	.86 [21.9mm]	5.16 [131.1mm]	.50 [12.7mm]

The above tool model is designed for use with a flush socket gear or extended sockets

Table 1
Fastener Diameter

Dash	Diameter
10	5/16"

Table 2
Ext'd.Socket Length
(Table 2, Accessories)

Code	Extension
A	Flush
E	5/8"
G	1.0"
J	2.0"
L	3.0"

Table 3
Spline Keys
(See Table 5, Accessories)

Code	Size
10SPK	5/16" Dia. Spline Bit

Table 4
Drive Shaft Extended Length

Code	Length	Index Unit
A	-	With
B	-	Without
C	2.0"	With
D	2.0"	Without
G	6.0"	With
H	6.0"	Without

Example of Complete Tool Model Number:

ET1060 C 10 G 10SPK

- 10SPK — Spline Key Size(Table 3)
- G — Extended Socket Length (Table 2)
- 10 — Fastener Diameter (Table 1)
- C — Ext'd. Drive Shaft (Table 4)
- ET1060 — Tool Model Number

Offset Pistol Grip Tools

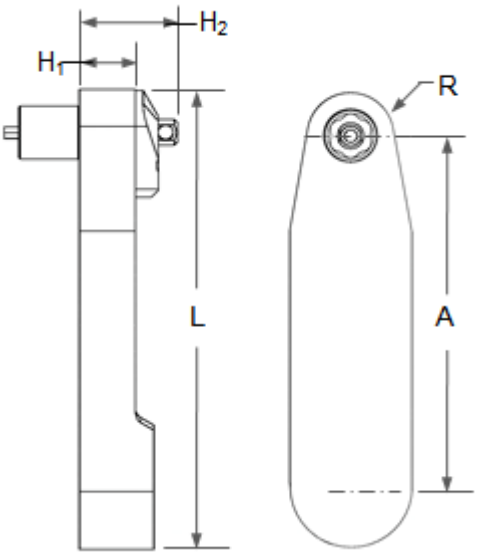

Model Number	No. of Gears	A	H_1	H_2	L	R
ET1015	3	1.62 [41.1mm]	.68 [17.3mm]	1.28 [32.5mm]	2.69 [68.3mm]	.50 [12.7mm]

The above tool model is designed for use with a flush socket gear or extended sockets

Table 1
Fastener Diameter

Dash	Diameter
10	5/16"

Table 2
Ext'd.Socket Length
(Table 2, Accessories)

Code	Extension
A	Flush
E	5/8"
G	1.0"
J	2.0"
L	3.0"

Table 3
Spline Keys
(See Table 5, Accessories)

Code	Size
10SPK	5/16" Dia. Spline Bit

Table 4
Drive Shaft Extended Length

Code	Length	Index Unit
A	-	With
B	-	Without
C	2.0"	With
D	2.0"	Without
G	6.0"	With
H	6.0"	Without

Example of Complete Tool Model Number:

ET1015 C 10 G 10SPK

- 10SPK — Spline Key Size(Table 3)
- G — Extended Socket Length (Table 2)
- 10 — Fastener Diameter (Table 1)
- C — Ext'd. Drive Shaft (Table 4)
- ET1015 — Tool Model Number

Straight Pistol Grip Tools

Tool Data:
Total Tool Length: 9.8” [250.8mm] without socket
Total Wt: 2.46 lbs [1.56 kg] with socket

Table 1
Fastener Diameter

Dash	Diameter
05	5/32"
06	3/16"
08	1/4"

Table 2
Ext'd.Socket Length

Code	Extension
J	2.0"
L	3.0"

Table 3
Spline Keys

Code	Size
05SPK	5/32" Dia. Spline Bit
06SPK	3/16" Dia. Spline Bit
08SPK	1/4" Dia. Spline Bit

Example of Complete Tool Model Number:

ETL2000B 06 J 06SPK

- 06SPK — Spline Key Size (Table 3)
- J — Extended Socket Length (Table 2)
- 06 — Fastener Hex Size (Table 1)
- ETL2000B — Tool Model Number

Tool Models: ET(L)2000, ET2000

Fastener Diameter	Socket Number	Socket Length	Socket Code	"A" Dia. Ref.	Spline Key
-5	463-9600	2.0"	J	0.53"	493-9600
	463-9601	3.0"	L		493-9601
-6	463-9602	2.0"	J	0.56"	493-9602
	463-9603	3.0"	L		493-9603
-8	463-9604	2.0"	J	0.65"	493-9604
	463-9605	3.0"	L		493-9605

Offset Pistol Grip Tools

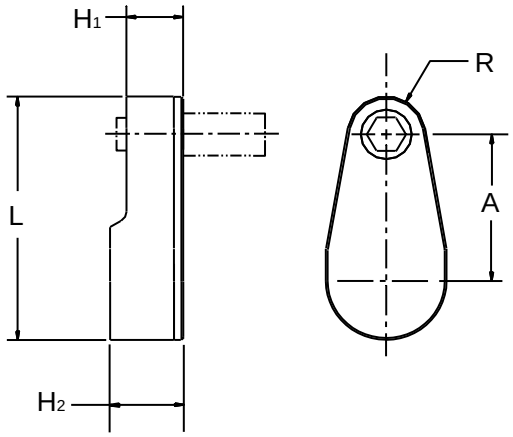

Model Number	No. of Gears	A	H_1	H_2	L	R
ETL3108	3	1.27 [32.3mm]	.47 [11.9mm]	.61 [15.4mm]	2.12 [53.8mm]	.35 [8.9mm]
ETL3110	3	1.33 [33.8mm]	.47 [11.9mm]	.61 [15.4mm]	2.26 [57.4mm]	.43 [10.8mm]

Model ET3108 flush socket gears available in 05 & 06 diameters only.
Model ET3110 is designed for use with a flush socket gear up to the 08 dia.

Table 1
Fastener Diameter

Dash	Diameter
05	5/32"
06	3/16"
08	1/4"

Table 2
Ext'd.Socket Length
(Table 1, Accessories)

Code	Extension
A	Flush
D	0.5"
G	1.0"
J	2.0"
L	3.0"

Table 3
Spline Keys
(See Table 5, Accessories)

Code	Size
05SPK	5/32" Dia. Spline Bit
06SPK	3/16" Dia. Spline Bit
08SPK	1/4" Dia. Spline Bit

Table 4
Drive Shaft Extended Length

Code	Length	Index Unit
A	-	With
B	-	Without
C	2.0"	With
D	2.0"	Without
G	6.0"	With
H	6.0"	Without

Example of Complete Tool Model Number:

ETL3110 C 08 A 08SPK

- 08SPK — Spline Key Size(Table 3)
- A — Extended Socket Length (Table 2)
- 08 — Fastener Diameter (Table 1)
- C — Ext'd. Drive Shaft (Table 4)
- ETL3110 — Tool Model Number

17º Offset Tools

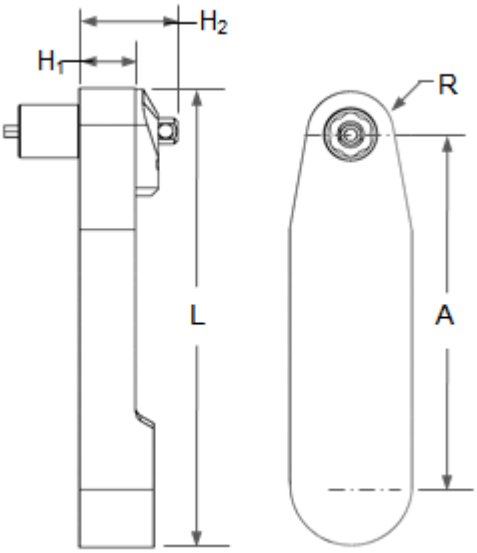

Model Number	No. of Gears	A	H_1	H_2	L	R
ETL3129A	5	2.68 [68.1mm]	.47 [11.9mm]	.61 [15.4mm]	3.53 [89.7mm]	.35 [8.8mm]

Model ELT3129A is designed for use with extended sockets on all sizes. Flush sockets can only be used with the -05 and -06 diameters.

Table 1
Fastener Diameter

Dash	Diameter
05	5/32"
06	3/16"
08	1/4"

Table 2
Ext'd.Socket Length
(Table 1, Accessories)

Code	Extension
A	Flush
D	0.5"
G	1.0"
J	2.0"
L	3.0"

Table 3
Spline Keys
(See Table 5, Accessories)

Code	Size
05SPK	5/32" Dia. Spline Bit
06SPK	3/16" Dia. Spline Bit
08SPK	1/4" Dia. Spline Bit

Example of Complete Tool Model Number:

ETL3129A 08 D 08SPK

- 08SPK — Spline Key Size(Table 3)
- D — Extended Socket Length (Table 2)
- 08 — Fastener Diameter (Table 1)
- ETL3129A — Tool Model Number

17º Offset Tools

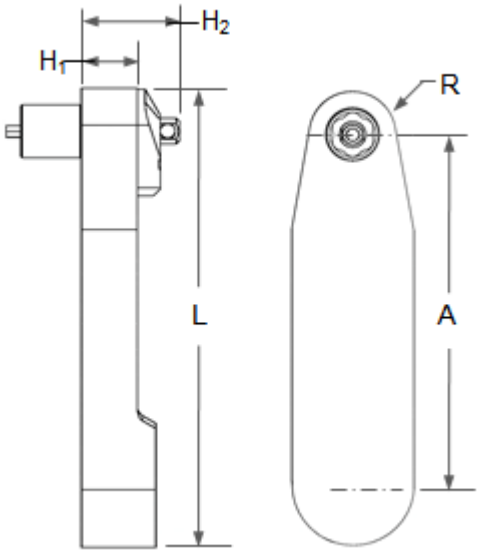

Flush Socket Gear Applications

Model Number	No. of Gears	A	H_1	H_2	L	R
ETL3110A	3	1.33 [33.8mm]	.47 [11.9mm]	.61 [15.4mm]	2.26 [57.4mm]	.43 [10.8mm]
ETL3111A	5	2.75 [69.9mm]	.47 [11.9mm]	.61 [15.4mm]	3.68 [93.3mm]	.43 [10.8mm]

Models ELT3110 & ELT3111 are designed for use with a flush socket gear or with extended sockets.

Table 1
Fastener Diameter

Dash	Diameter
05	5/32"
06	3/16"
08	1/4"

Table 2
Ext'd.Socket Length
(Table 1, Accessories)

Code	Extension
A	Flush
D	0.5"
G	1.0"
J	2.0"
L	3.0"

Table 3
Spline Keys
(See Table 5, Accessories)

Code	Size
05SPK	5/32" Dia. Spline Bit
06SPK	3/16" Dia. Spline Bit
08SPK	1/4" Dia. Spline Bit

Example of Complete Tool Model Number:

ETL3111A 08 A 08SPK

- 08SPK — Spline Key Size(Table 3)
- A — Extended Socket Length (Table 2)
- 08 — Fastener Diameter (Table 1)
- ETL3111A — Tool Model Number

17º Offset Tools

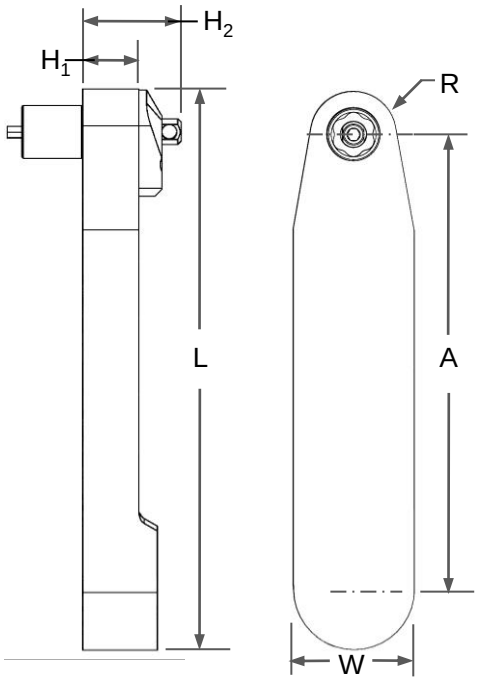

Model Number	No. of Gears	A	H_1	H_2 (Ref)	W	L	R
ETL3118	7	4.05 [102.8mm]	.47 [11.9mm]	.78 [19.8mm]	1.0 [25.4mm]	4.9 [124.5mm]	.35 [8.8mm]

Table 1
Fastener Diameter

Dash	Diameter
05	5/32"
06	3/16"
08	1/4"

Note: 08 Dia. Not available with a flush socket gear

Table 2
Ext'd.Socket Length
(Table 1, Accessories)

Code	Extension
D	0.5"
G	1.0"
J	2.0"
L	3.0"

Table 3
Spline Keys
(See Table 5, Accessories)

Code	Size
000	No Spline Bit
05SPK	5/32" Dia. Spline Bit
06SPK	3/16" Dia. Spline Bit
08SPK	1/4" Dia. Spline Bit

Example of Complete Tool Model Number:

ETL3118A 06 E 06SPK

- 06SPK — Spline Key Size(Table 3)
- E — Extended Socket Length (Table 2)
- 06 — Fastener Diameter (Table 1)
- ETL3118A — Tool Model Number

HOWMET AEROSPACE

17º Offset Tools

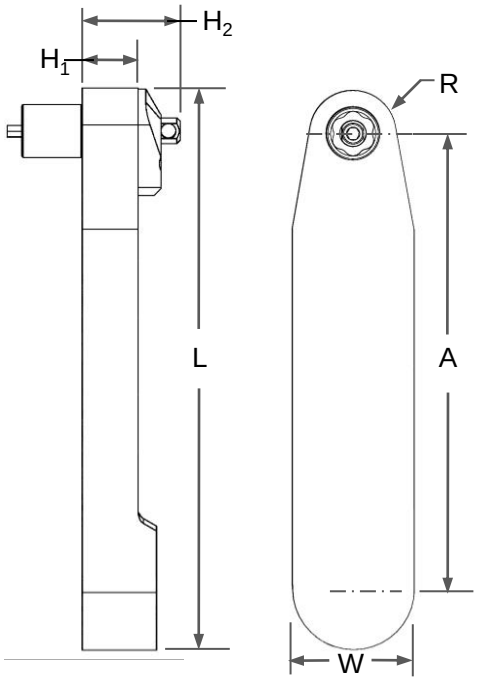

Flush Socket Gear Applications

Model Number	No. of Gears	A	H_1	H_2 (Ref)	W	L	R
ETL3131	7	4.11 [104.4mm]	.47 [11.9mm]	.78 [19.8mm]	1.0 [25.4mm]	4.97 [126.2mm]	.43 [10.8mm]

Table 1
Fastener Diameter

Dash	Diameter
08	1/4"

Table 2
Ext'd.Socket Length
(Table 1, Accessories)

Code	Extension
A	Flush
D	0.5"
G	1.0"
J	2.0"
L	3.0"

Table 3
Spline Keys
(See Table 5, Accessories)

Code	Size
000	No Spline Bit
08SPK	1/4" Dia. Spline Bit

Example of Complete Tool Model Number:

ETL3131A 08 A 08SPK

- 08SPK — Spline Key Size(Table 3)
- A — Extended Socket Length (Table 2)
- 08 — Fastener Diameter (Table 1)
- ETL3131A — Tool Model Number

17º Offset Tools

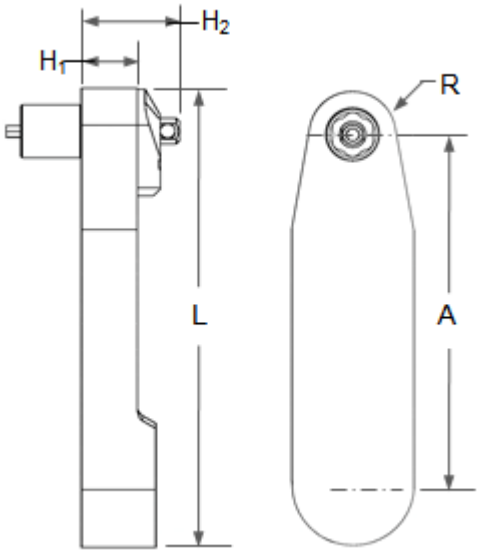

Note: Uses LTV29-2 R30-10

Model Number	No. of Gears	A	H_1	H_2	L	R
ET3198A	5	3.27 [83.1mm]	.50 [12.7mm]	.65 [16.7mm]	4.3 [110.0mm]	.437 [11.1mm]

Model ET3198A is designed for use with extended sockets

Table 1
Fastener Diameter

Dash	Diameter
10	5/16"

Table 2
Ext'd.Socket Length
(Table 3, Accessories)

Code	Extension
A	Flush
E	5/8"
G	1.0"
J	2.0"
L	3.0"

Table 3
Spline Keys
(See Table 5, Accessories)

Code	Size
10SPK	5/16" Dia. Spline Bit

Example of Complete Tool Model Number:

ETL3198A 10 G 10SPK

- 10SPK — Spline Key Size(Table 2)
- G — Extended Socket Length (Table 2)
- 10 — Fastener Diameter (Table 1)
- ETL3198A — Tool Model Number

17º Offset Tools

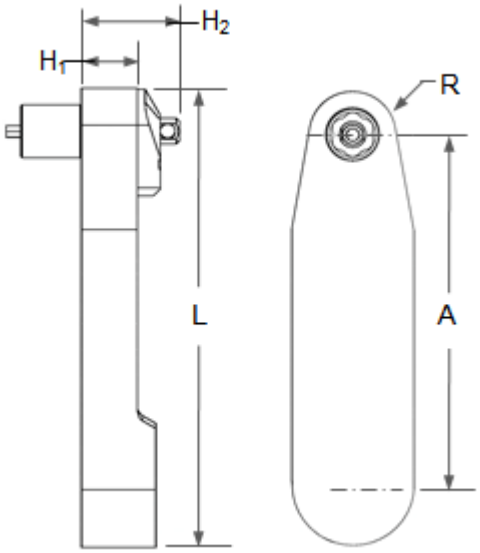

Atlas Copco Motor: LTV39-2 R70-13 Mod.

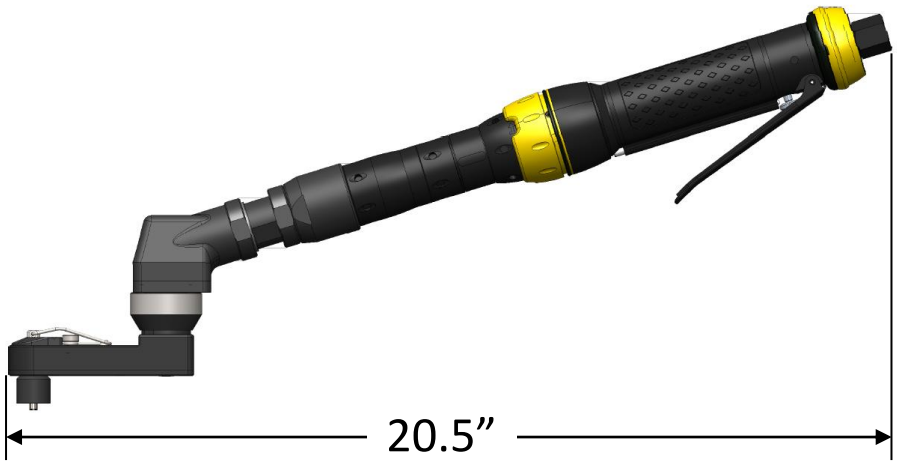

Model Number	No. of Gears	A	H_1	H_2	L	R
ET3492A	5	3.00 [76.2mm]	.69 [17.5mm]	.94 [23.9mm]	4.19 [106.4mm]	.56[14.2mm]

Model ET3492A is designed for use with a flush socket gear or extended sockets

Table 1
Fastener Diameter

Dash	Diameter
10	5/16"

Table 2
Ext'd.Socket Length
(Table 3, Accessories)

Code	Extension
A	Flush
E	5/8"
G	1.0"
J	2.0"
L	3.0"

Table 3
Spline Keys
(See Table 5, Accessories)

Code	Size
10SPK	5/16" Dia. Spline Bit

Example of Complete Tool Model Number:

ET3492A 10 G 10SPK

- 10SPK — Spline Key Size(Table 3)
- G — Extended Socket Length (Table 2)
- 10 — Fastener Diameter (Table 1)
- ET3492A — Tool Model Number

17º Offset Tools

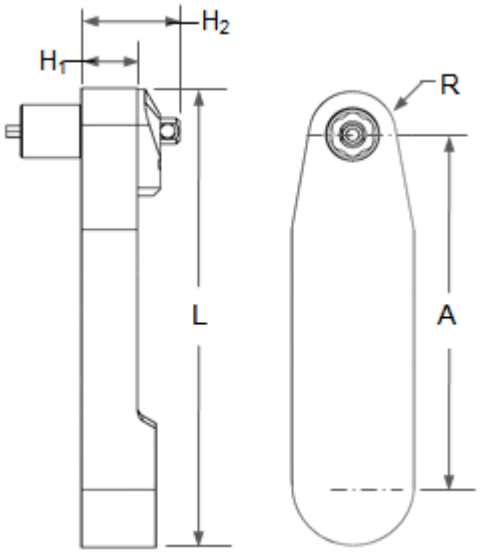

Atlas Copco Motor: LTV39-2 R70-13 Mod.

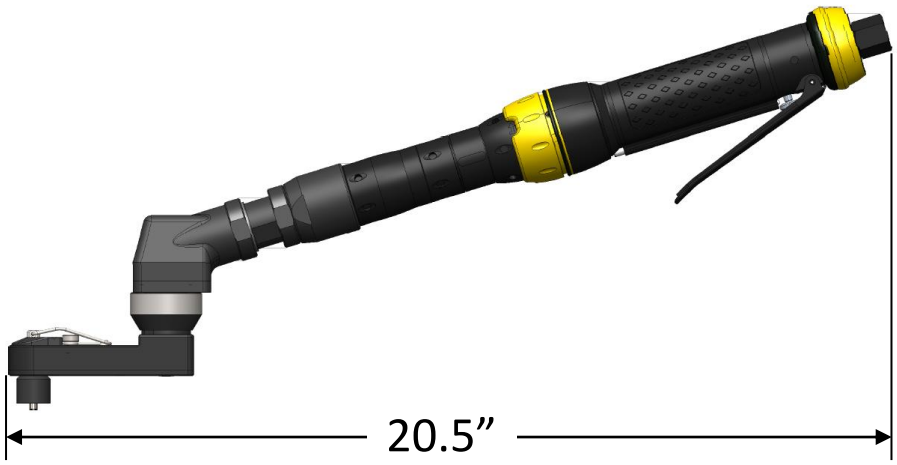

Model Number	No. of Gears	A	H_1	H_2	L	R
ET3472A	5	3.00 [76.2mm]	.69 [17.5mm]	.94 [23.9mm]	4.19 [106.4mm]	.56[14.2mm]

Model ET3492A is designed for use with a flush socket gear or extended sockets

Table 1
Fastener Diameter

Dash	Diameter
12	3/8"

Table 2
Ext'd.Socket Length
(Table 3, Accessories)

Code	Extension
A	Flush
E	5/8"
G	1.0"
J	2.0"
L	3.0"

Table 3
Spline Keys
(See Table 5, Accessories)

Code	Size
10SPK	5/16" Dia. Spline Bit

Example of Complete Tool Model Number:

ET3492A 12 G 12SPK

- 12SPK — Spline Key Size(Table 3)
- G — Extended Socket Length (Table 2)
- 12 — Fastener Diameter (Table 1)
- ET3492A — Tool Model Number

17º Offset Tools

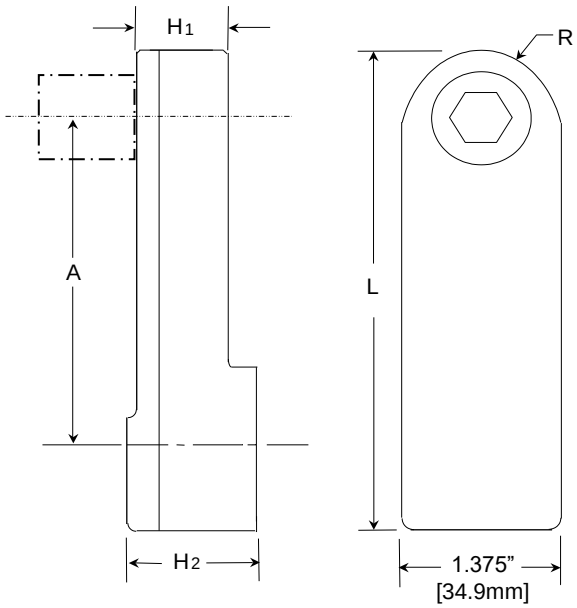

Ref. Atlas Copco
Motor: LTV39-2 R70-13

Model Number	No. of Gears	A	H_1	H_2	L	R
ET3165A	5	3.19 [81.0mm]	.69 [17.6mm]	.87 [22.2mm]	4.44 [112.8mm]	.68[17.3mm]

Table 1
Fastener Diameter

Dash	Diameter
12	3/8"

Table 2
Ext'd.Socket Length

Code	Extension
A	Flush
G	1.0"
J	2.0"

Table 3
Spline Keys

Code	**Size**
12SPK	3/8" Dia. Spline Bit

Example of Complete Tool Model Number:

ET3165A 12 G 12SPK

- 12SPK — Spline Key Size(Table 3)
- G — Extended Socket Length (Table 2)
- 12 — Fastener Diameter (Table 1)
- ET3165A — Tool Model Number

Right Angle Tools

Model Number	L	H	Center to Side Angle Head	Weight
ETL3100B	9.6" [243mm]	1.5" [36.6mm]	0.53" [13.5mm]	1.9 lbs [0.88 kg]

Table 1
Fastener Diameter

Dash	Diameter
06	3/16"
08	1/4"

Table 2
Ext'd.Socket Length
(Table 3, Accessories)

Code	Extension
E	5/8"
G	1.0"
J	2.0"
L	3.0"

Table 3
Spline Keys
(See Table 5, Accessories)

Code	Size
06SPK	3/16" Dia. Spline Bit
08SPK	1/4" Dia. Spline Bit

Example of Complete Tool Model Number:

ETL3100B_06_G_06SPK

- 06SPK — Spline Key Size(Table 3)
- G — Extended Socket Length (Table 2)
- 06 — Fastener Diameter (Table 1)
- ETL3100B — Tool Model Number

Right Angle Tools

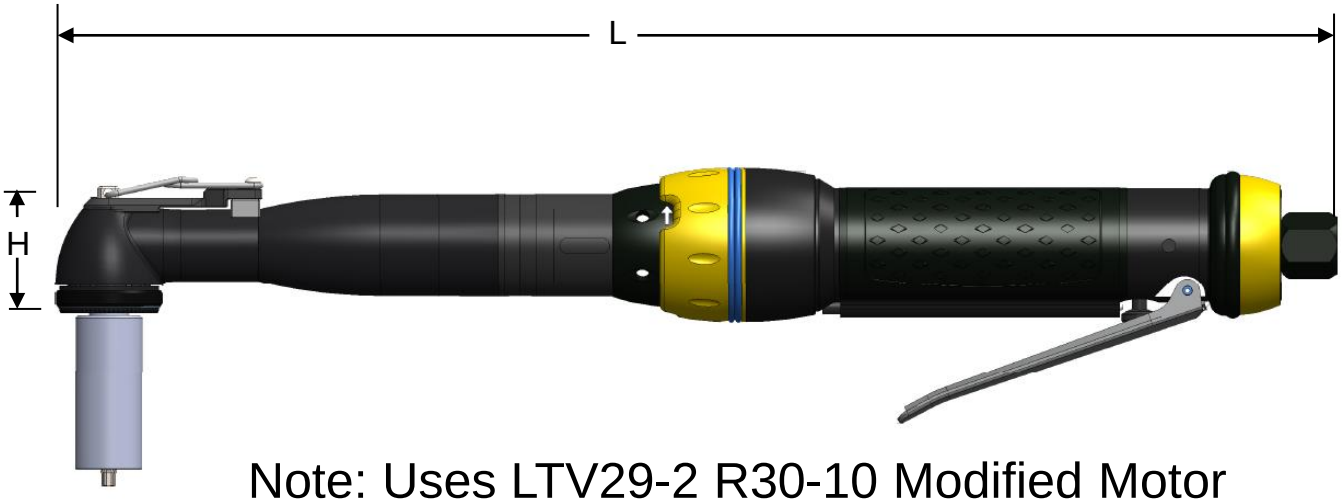

Note: Uses LTV29-2 R30-10 Modified Motor

Model Number	L	H	Center to Side Angle Head	Weight
ET3100B08(*)08SPK	13.8" [350mm]	1.5" [36.6mm]	0.53" [13.5mm]	3.1 lbs [1.4 kg]

Table 1

Fastener Diameter

Dash	Diameter
8	1/4"

Table 2

Extended Sockets and Spline Keys

Code	Extension	Socket P/N	Spline Key
E	5/8"	463-9121	493-9121
G	1.0"	463-9122	493-9122
J	2.0"	463-9124	493-9124
L	3.0"	463-9126	493-9126

Example of Complete Tool Model Number:

ET3100B 08 G 08SPK

- 08SPK — Spline Key Size
- G — Extended Socket Length (Table 2)
- 08 — Fastener Diameter (Table 1)
- ET3100B — Tool Model Number

Right Angle Tools

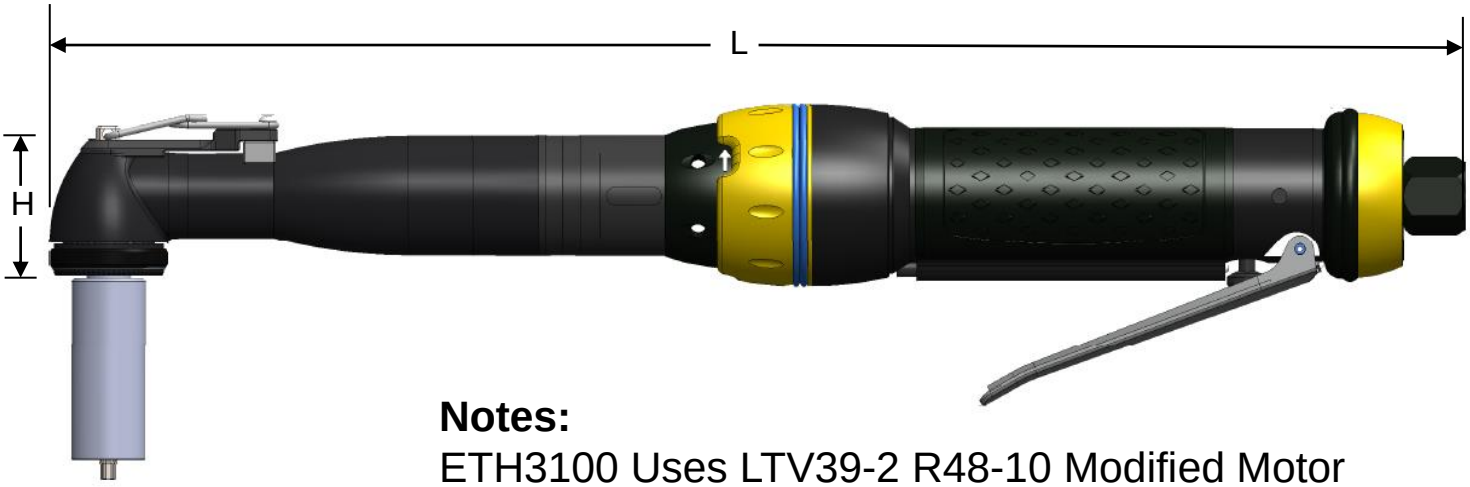

Notes:
ETH3100 Uses LTV39-2 R48-10 Modified Motor

Model Number	L	H	Center to Side Angle Head	Weight
ET(H)3100B10(*)10SPK	13.8" [350mm]	1.5" [36.6mm]	0.53" [13.5mm]	3.1 lbs [1.4 kg]

H = Heavy Duty Motor

Table 1
Fastener Diameter

Dash	Dia.
10	5/16"

Table 2
Extended Sockets & Spline Keys

Code	Extension	Socket P/N	Spline Keys
E	5/8"	463-9111	493-9111
G	1.0"	463-9112	493-9112
J	2.0"	463-9114	493-9114
L	3.0"	463-9116	493-9116

Example of Complete Tool Model Number:

ET(H)3100B 10 G 10SPK

- 10SPK — Spline Key Size
- G — Extended Socket Length (Table 2)
- 10 — Fastener Diameter (Table 1)
- ET(H)3100B — Tool Model Number

Right Angle Tools

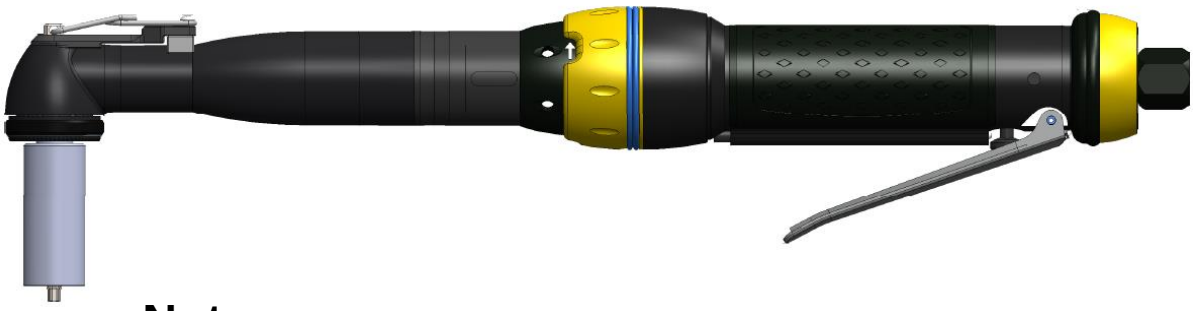

Notes:
ETH3100 Uses LTV39-2 R48-1010 Modified Motor

Model Number	L	H (Without Socket)	Center to Side Angle Head	Weight
ET(H)3100B12(*)SPK	16.8" [427mm]	1.6" [41mm]	0.79" [20.0mm]	4.4 lbs [2.0 kg]

H = Heavy Duty Motor

Table 1
Fastener Diameter

Dash	Dia.
12	3/8"

Table 2
Ext'd.Sockets , Spline Key & Hex Key Details

		-12 Diameter			
Code	Extension	Socket P/N	Spline Key	Hex Key Holder	Hex Key
G	1.0"	463-9101	493-9101	016-9799	093-9007
J	2.0"	463-9104	493-9104	NA	093-9007
L	3.0"	463-9106	493-9106	NA	093-9007

Example of Complete Tool Model Number:

ET(H)3100B 12 G 12SPK

- 12SPK — Hex Key Size
- G — Extended Socket Length (Table 2)
- 12 — Fastener Diameter (Table 1)
- ET(H)3100B — Tool Model Number

Right Angle Tools

Note: Uses LTV39-2 R70-13 Modified Motor

Model Number	L	H (Without Socket)	Center to Side Angle Head	Weight
ET3100B14 (*) 187E	16.8" [427 mm]	2.75" [69.8mm]	0.79" [20.0mm]	4.8 lbs [2.2 kg]

Table 1
Fastener Diameter

Dash	Dia.
14	7/16"

Table 2
Ext'd.Sockets and Hex Key Details

		-14 Diameter		
Code	Extension	Socket P/N	Hex Key Holder	Hex Key
G	1.0"	463-9298	016-9897	093-9023
J	2.0"	463-9300	016-9898	
L	3.0"	463-9303	016-9899	

Example of Complete Tool Model Number:

ET3100B 14 G 187E

- 187E — Hex Key Size
- G — Extended Socket Length (Table 2)
- 14 — Fastener Diameter (Table 1)
- ET3100B — Tool Model Number

Right Angle Tools

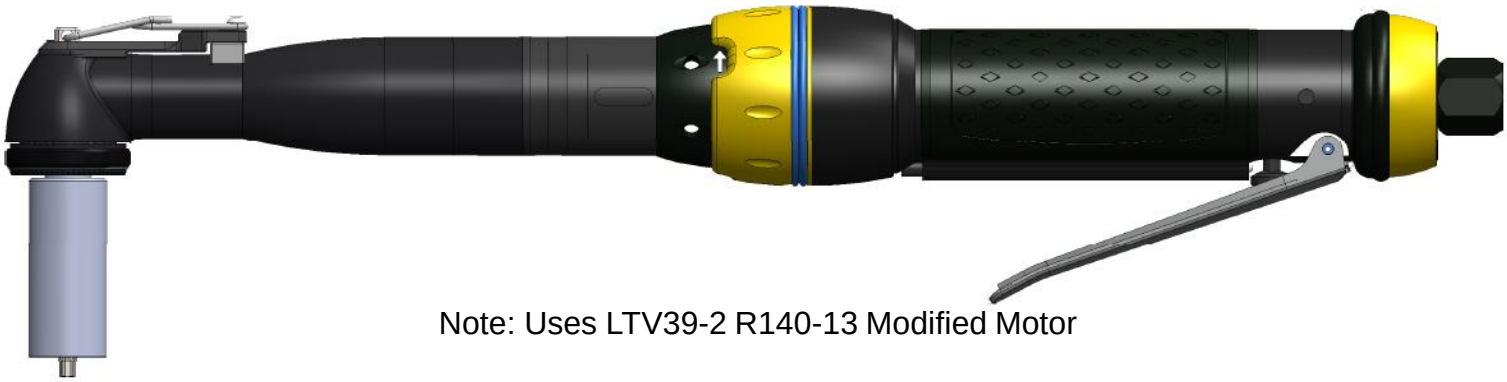

Note: Uses LTV39-2 R140-13 Modified Motor

Model Number	L	H (Without Socket)	Center to Side Angle Head	Weight
ET3100B16 (*) 218E	20.3" [515mm]	2.04" [52mm]	.984" [25mm]	7.2 lbs [3.3 kg]

Table 1
Fastener Diameter

Dash	Dia.
16	1/2"

Table 2
Ext'd.Sockets and Hex Key Details

		-16 Diameter		
Code	Extension	Socket P/N	Hex Key Holder	Hex Key
G	1.00"	TBD	TBD	093-9262
I	1.75"	263-9675	016-9819	093-9262
K	2.5"	263-9676	016-9820	093-9262

Example of Complete Tool Model Number:

ET3100B 16 K 218E

- 218E — Hex Key Size
- K — Extended Socket Length (Table 2)
- 16 — Fastener Diameter (Table 1)
- ET3100B — Tool Model Number

SECTION 2

Accessories for Power Installation Tools

HOWMET AEROSPACE

ERGO KEY™ System For Power Tools
Conversion From hex key to Spline-Lok® key

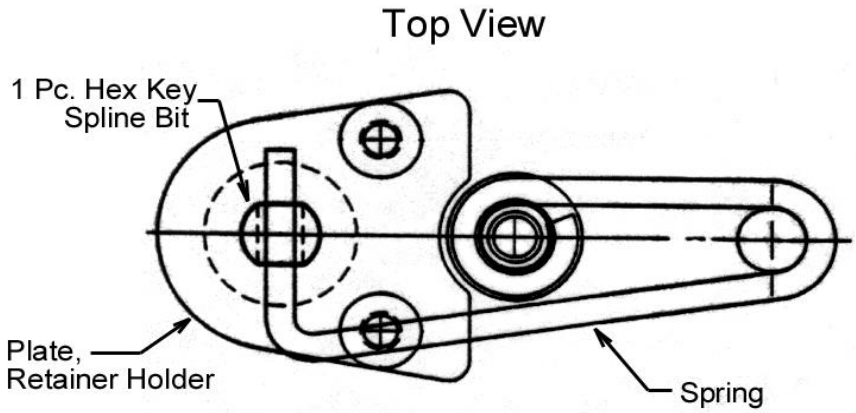

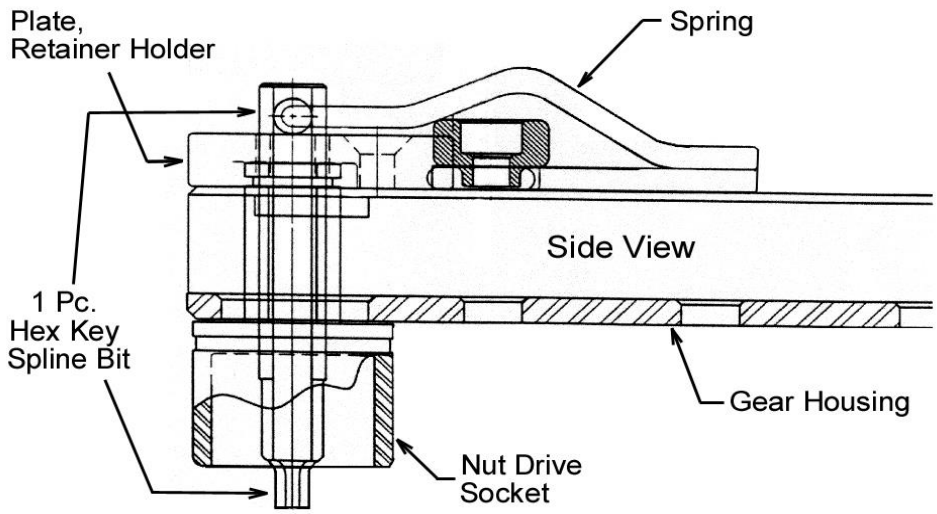

Kit Part Numbers:

Tool Model	Kit Ordering No.
ETL1108 Series	031-9413
ETL1129 Series	031-9414
ETL3109 Series	
ETL1110 Series	031-9415
ETL1111 Series	031-9416
ETL3111 Series	
ET1020 Series	031-9418

Kit Includes:

(1) Plate, Retainer Holder
(1) Return Spring
(2) Bearing Pins
All Necessary Screws and Bushings
Note: Kits do not include sockets, hex keys or spline keys

Extended Sockets for Power Tools

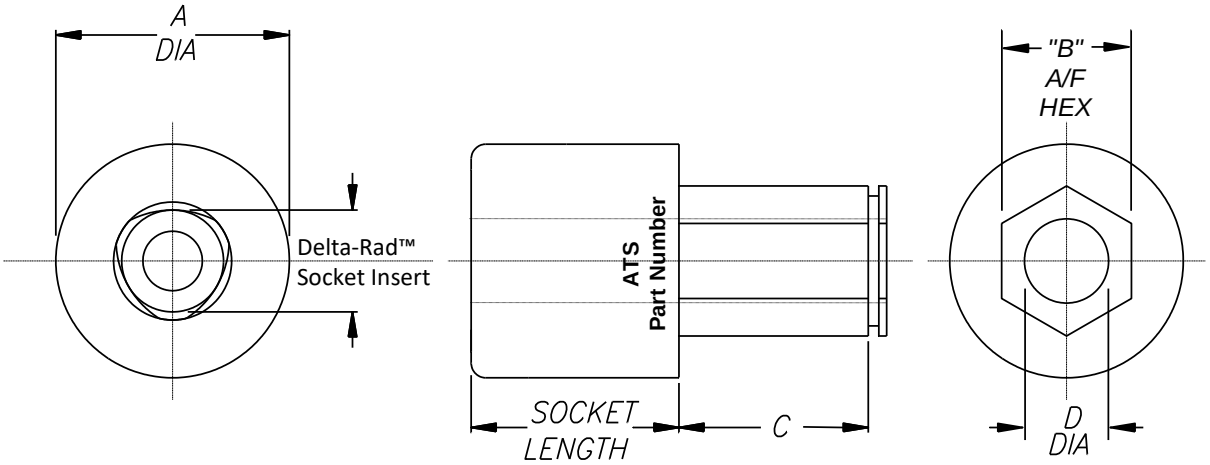

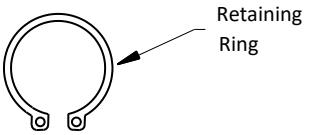

Table 1

Tool Models: ETL1108, ETL1129, ETL1110, ETL1111, ETL1117,ETL3108, ETL3129, ETL3110, ETL3111,ETL3118

Fastener Diameter	Socket Number	Socket Length	Socket Code	"A" Dia. Ref.	"B" Ref.	"C" Ref.	"D" Dia. Ref.	Retaining Ring
-5	463-9001	1/2"	D	0.53"	5/16"	0.48"	0.22"	096-9074
	463-9002	1.0"	G					
	463-9004	2.0"	J	1.06"				
	463-9006	3.0"	L					
-6	463-9011	1/2"	D	0.56"				
	463-9012	1.0"	G					
	463-9014	2.0"	J					
	463-9016	3.0"	L					
-8	463-9021	1/2"	D	0.66"				
	463-9022	1.0"	G					
	463-9024	2.0"	J					
	463-9026	3.0"	L					

Table 2

Tool Models: ET1015, ET1020

Fastener Diameter	Socket Number	Socket Length	Socket Code	"A" Dia. Ref.	"B" Ref.	"C" Ref.	"D" Dia. Ref.	Retaining Ring
-10	463-9161	5/8	E	0.77"	7/16"	0.68"	0.31"	096-9468
	463-9162	1.0"	G					
	463-9164	2.0"	J					
	463-9166	3.0"	L					

Extended Sockets for Power Tools

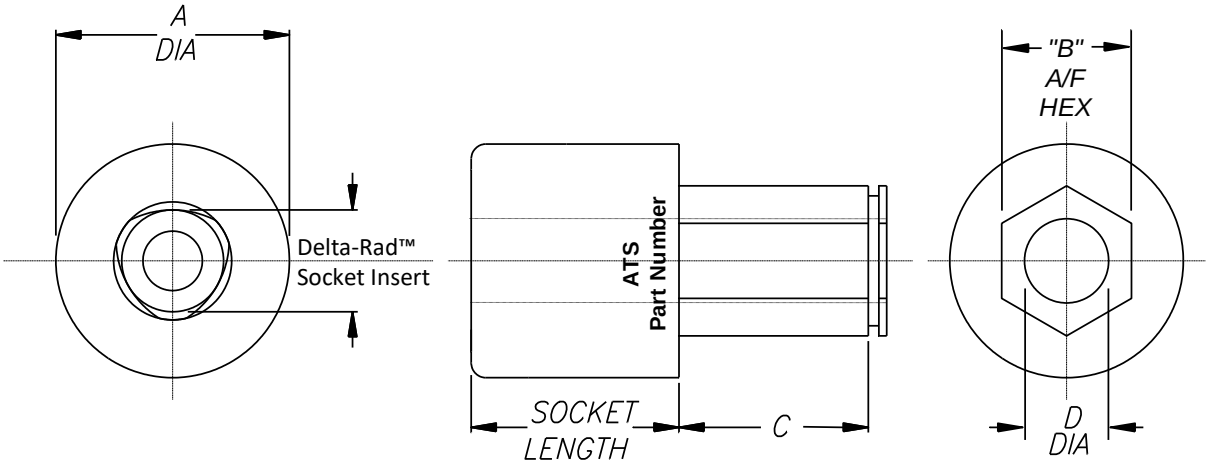

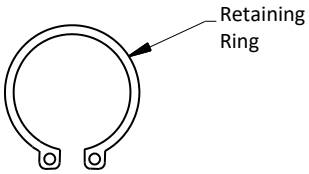

Table 3

Tool Models: ET3472, ET3492, ET3165

Fastener Diameter	Socket Number	Socket Length	Socket Code	"A" Dia. Ref.	"B" Ref.	"C" Ref.	"D" Dia. Ref.	Retaining Ring
-10	463-9131	5/8"	E	0.77"	0.44"	0.70"	0.31"	096-9495
	463-9132	1.0"	G					
	463-9134	2.0"	J					
	463-9136	3.0"	L					
-12	463-9141	5/8"	E	0.88"				
	463-9142	1.0"	G					
	463-9144	2.0"	J					
	463-9146	3.0"	L					

Spline-Lok® keys for Power Tools

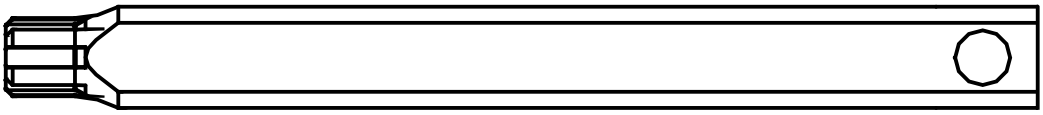

Power Tool Spline-Lok® Keys

Table 5

Models: ETL1108, ETL1129, ETL1110, ETL1111, ETL3108, ETL3129, ETL3110, ETL3111, ETL1115, ETL1117

Fastener Dia.	Socket Length	Spline-Lok® Key Part Number
-5	Flush	493-9201
	1/2"	493-9001
	1.0"	493-9002
	2.0"	493-9004
	3.0"	493-9006
-6	Flush	493-9202
	1/2"	493-9011
	1.0"	493-9012
	2.0"	493-9014
	3.0"	493-9016
-8	Flush	493-9203
	1/2"	493-9021
	1.0"	493-9022
	2.0"	493-9024
	3.0"	493-9026

Models: ET1015, ET1020

Fastener Dia.	Socket Length	Spline-Lok® Key Part Number
-10	Flush	493-9204
	5/8"	493-9161
	1.0"	493-9162
	2.0"	493-9164
	3.0"	493-9166

Models: ET3100

-10	5/8"	493-9111
	1.0"	493-9112
	2.0"	493-9114
	3.0"	493-9116
-12	5/8"	493-9102
	1.0"	493-9101
	2.0"	493-9104
	3.0"	493-9106

Models: ET3472, ET3492, ET3165

-10	Flush	493-9204
	5/8"	493-9131
	1.0"	493-9132
	2.0"	493-9134
	3.0"	493-9136
-12	5/8"	493-9141
	1.0"	493-9142
	2.0"	493-9144
	3.0"	493-9146

Flush Socket Gears for Power Tools

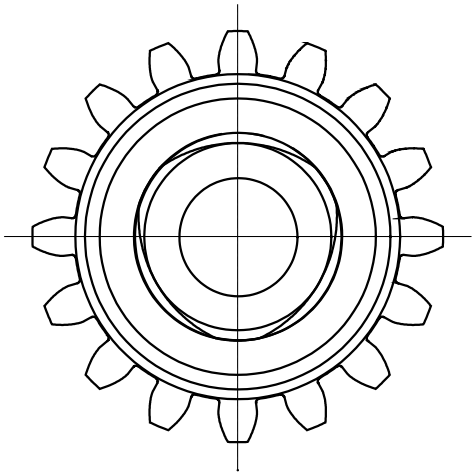

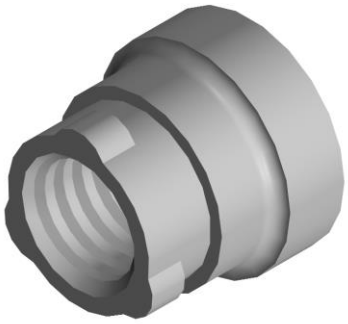

Table 4

Flush Socket Gears for Power Tools

Power Tool Model Number	Fastener Dia.	Socket Gear Part Number
ETL1110	-5	461-9008
ETL1111		
ETL3110		
ETL3111		
ETL1129	-6	461-9202
ETL3129		
ETL1110	-6	461-9009
ETL1111		
ETL3110		
ETL3111		
ETL1110	-8	461-9010
ETL1111		
ETL3110		
ETL3111		
ET1015	-10	461-9011
ET1020		
ET3492	-10	461-9012
ET3472	-12	N/A

SECTION 3

Hand Installation Tools

HOWMET AEROSPACE

Hand Ratchet Wrench

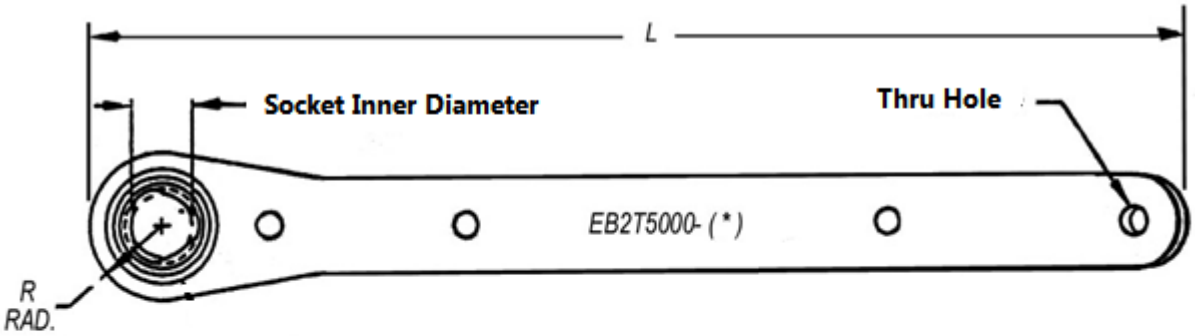

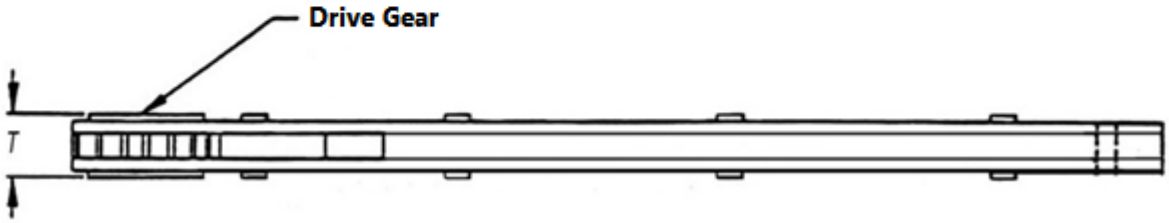

Fastener Dia.	Wrench Part Number	R REF.	T REF.	L REF.	Socket Inner Dia.
-5	EB2T5000-5	.31	.38	4.31	.2230 / .2215
-6	EB2T5000-6	.33	.38	4.31	.2470 / .2455
-8	EB2T5000-8	.39	.38	5.50	.3315 / .3300
-10	EB2T5000-10	.50	.38	5.50	.4015 / .4000
-12	EB2T5000-12	.65	.50	6.81	.4960 / .4943

Inspect Delta-Rad™ socket using EB2G2000 Gauge.

Example of Complete Wrench Model Number:

EB2T5000 - 6

- 6 — Fastener Diameter Size
- EB2T5000 — Tool Model Number

Note:
The nature of the installation of the Eddie-Bolt® 2 system results in a large drop in installation torque wrench forces as the installation is completed. Care should be exercised to avoid injury during manual installations as a result of this drop in resistance.

Bent Handle Ratchet Wrench

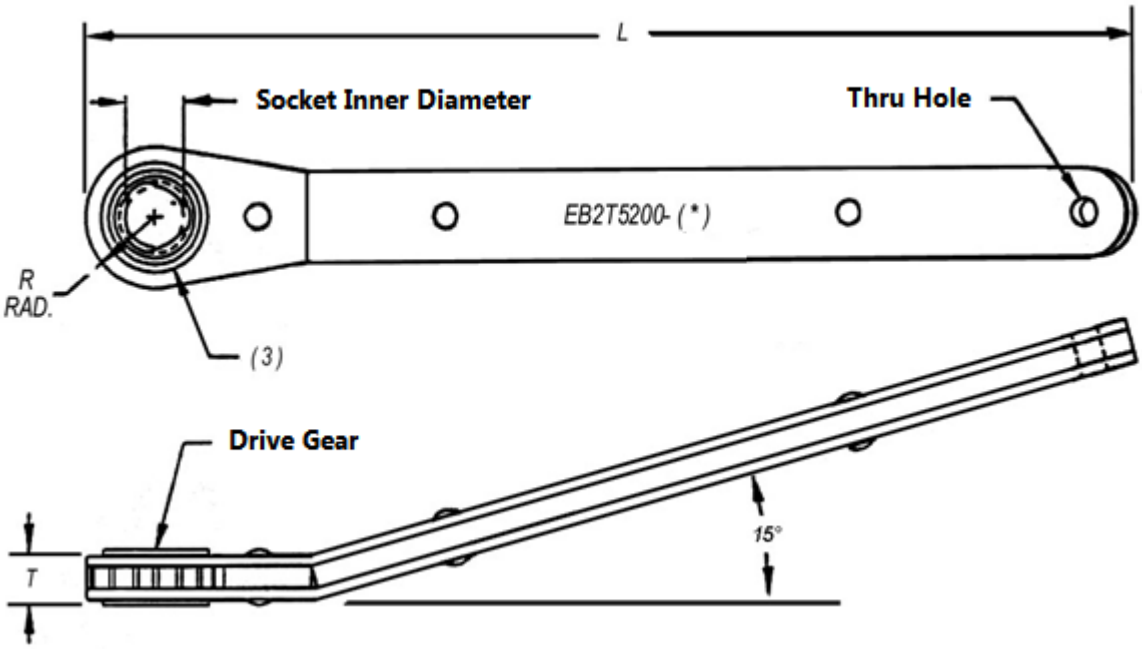

Fastener Dia.	Wrench Part Number	R REF.	T REF.	L REF.	Socket Inner Dia.
-5	EB2T5200-5	.31	.38	4.31	.2230 / .2215
-6	EB2T5200-6	.33	.38	4.31	.2470 / .2455
-8	EB2T5200-8	.39	.38	5.50	.3315 / .3300
-10	EB2T5200-10	.50	.38	5.50	.4015 / .4000
-12	EB2T5200-12	.58	.50	6.81	.4960 / .4943

Inspect Delta-Rad™ socket using EB2G2000 Gauge.

Example of Complete Wrench Model Number:

EB2T5200 - 6

- 6 — Fastener Diameter Size
- EB2T5200 — Tool Model Number

Note:
The nature of the installation of the Eddie-Bolt® 2 system results in a large drop in installation torque wrench forces as the installation is completed. Care should be exercised to avoid injury during manual installations as a result of this drop in resistance.

Offset Hand Wrench

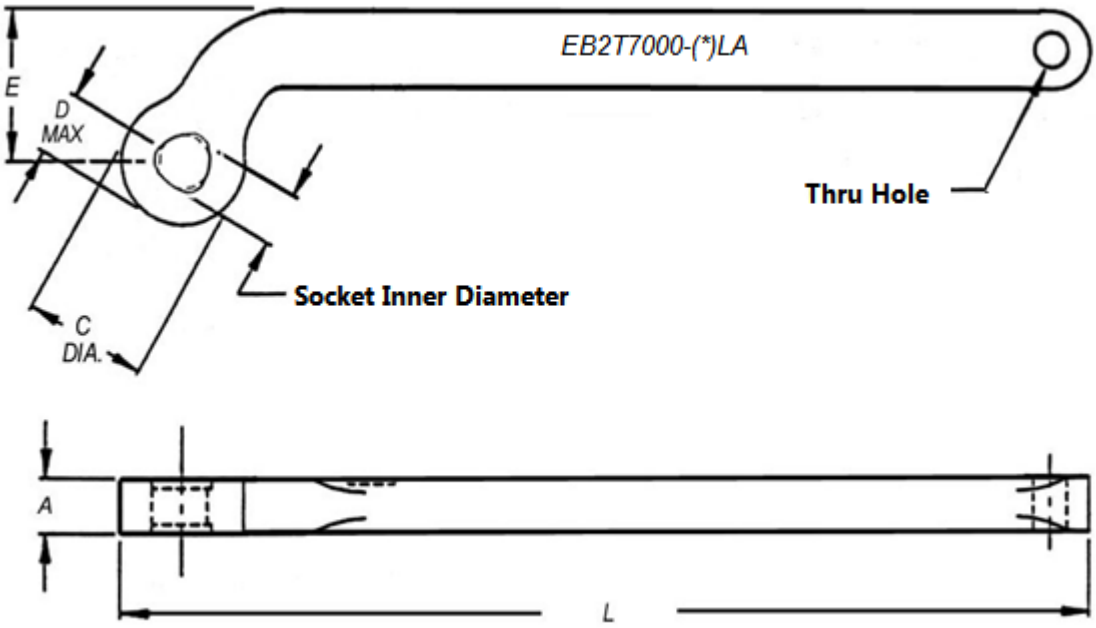

Fastener Dia.	Wrench Part Number	A Ref.	Length Ref.	C Dia. Ref.	D Max.	E Ref.	Socket Inner Dia.
-5	EB2T7000-5LA	.26	4.5	.44	.22	.63	.2230 / .2215
-6	EB2T7000-6LA	.26	4.5	.44	.22	.63	.2470 / .2455
-8	EB2T7000-8LA	.31	5.5	.54	.27	.79	.3315 / .3300
-10	EB2T7000-10LA	.32	5.5	.70	.35	.99	.4015 / .4000
-12	EB2T7000-12LA	.36	7.5	.80	.40	1.17	.4960 / .4943

Inspect Delta-Rad™ socket using EB2G2000 Gauge.

Example of Complete Wrench Model Number:

EB2T7000 – 6LA

Fastener Diameter Size

Tool Model Number

Note:
The nature of the installation of the Eddie-Bolt® 2 system results in a large drop in installation torque wrench forces as the installation is completed. Care should be exercised to avoid injury during manual installations as a result of this drop in resistance.

Pivot Handle Wrench

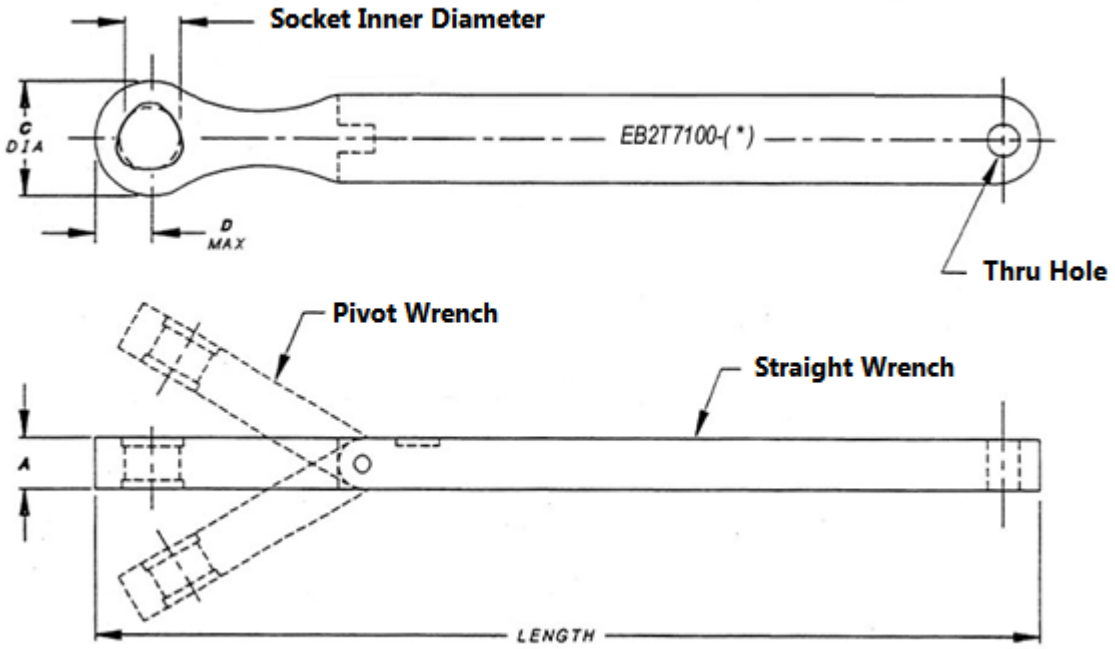

Fastener Dia.	Straight Wrench Part Number	Pivot Wrench Part Number	A Ref.	Length Ref.	C Dia. Ref.	D Max.	Socket Inner Dia.
-5	EB2T7100-5LA	EB2T7100-5PLA	.23	4.5	.44	.22	.2230 / .2215
-6	EB2T7100-6LA	EB2T7100-6PLA	.23	4.5	.44	.22	.2470 / .2455
-8	EB2T7100-8LA	EB2T7100-8PLA	.26	5.5	.54	.27	.3315 / .3300
-10	EB2T7100-10LA	EB2T7100-10PLA	.32	5.5	.70	.35	.4015 / .4000
-12	EB2T7100-12LA	EB2T7100-12PLA	.36	7.5	.80	.40	.4960 / .4943

Inspect Delta-Rad™ socket using EB2G2000 Gauge.

Example of Complete Wrench Model Number:

EB2T7100 - 6LA

- 6LA → Fastener Diameter Size
- EB2T7100 → Tool Model Number

Note:
The nature of the installation of the Eddie-Bolt® 2 system results in a large drop in installation torque wrench forces as the installation is completed. Care should be exercised to avoid injury during manual installations as a result of this drop in resistance.

45° Offset Hand Ratchet Wrench

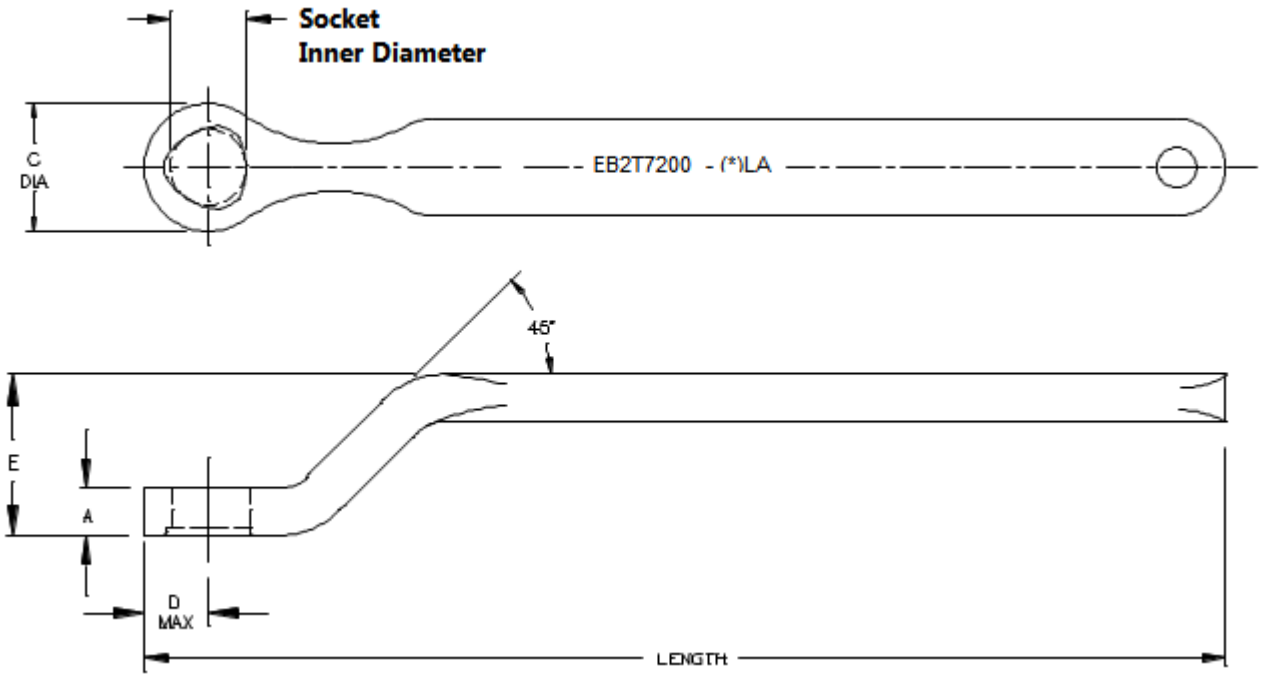

Fastener Dia.	Offset Wrench Part Number	A Ref.	C Dia. Ref.	D Max.	Length Ref.	E Ref.	Socket Inner Dia.
-5	EB2T7200-5LA	.21	.44	.22	4.5	.80	.2230 / .2215
-6	EB2T7200-6LA	.21	.44	.22	4.5	.80	.2470 / .2455
-8	EB2T7200-8LA	.26	.54	.27	5.5	.84	.3315 / .3300
-10	EB2T7200-10LA	.27	.70	.35	5.5	.88	.4015 / .4000
-12	EB2T7200-12LA	.31	.80	.40	7.5	1.02	.4960 / .4943

Inspect Delta-Rad™ socket using EB2G2000 Gauge.

Example of Complete Wrench Model Number:

EB2T7200 - 6LA

Fastener Diameter Size

Tool Model Number

Note:
The nature of the installation of the Eddie-Bolt® 2 system results in a large drop in installation torque wrench forces as the installation is completed. Care should be exercised to avoid injury during manual installations as a result of this drop in resistance.

45° Offset Hand Wrench

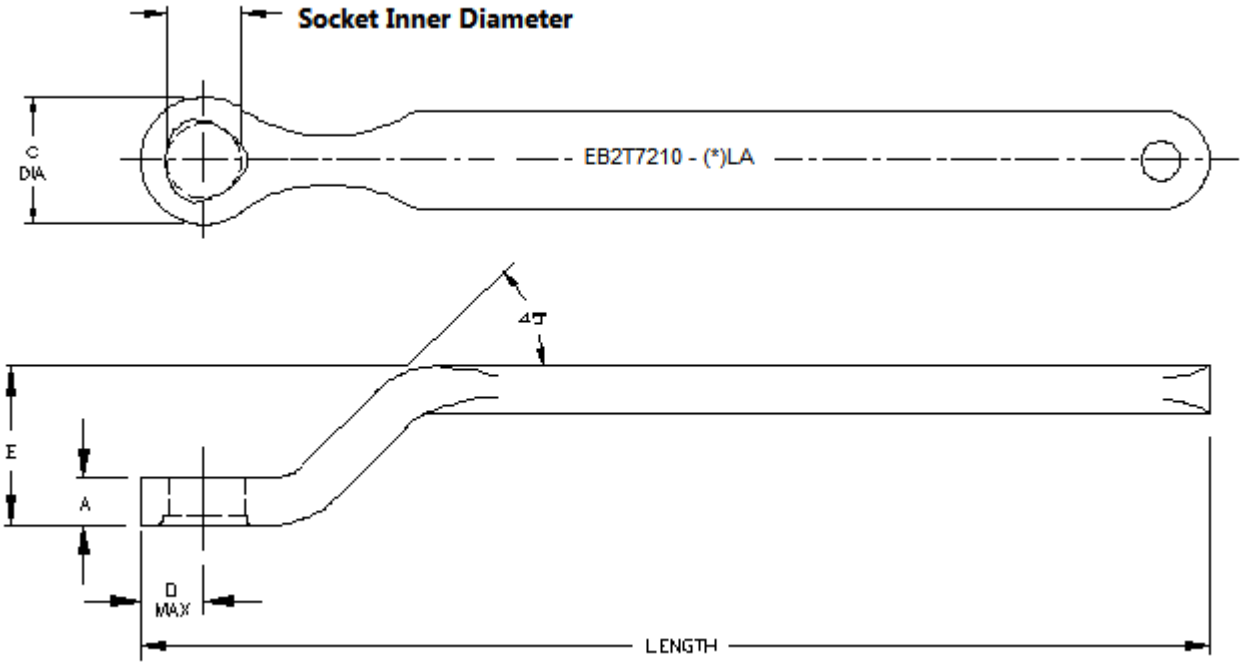

Fastener Dia.	Offset Wrench Part Number	A Ref.	C Dia. Ref.	D Max.	Length Ref.	E Ref.	Socket Inner Dia.
-5	EB2T7210-5LA	.21	.44	.22	4.5	.80	.2230 / .2215
-6	EB2T7210-6LA	.21	.44	.22	4.5	.80	.2470 / .2455
-8	EB2T7210-8LA	.26	.54	.27	5.5	.84	.3315 / .3300
-10	EB2T7210-10LA	.27	.70	.35	5.5	.88	.4015 / .4000
-12	EB2T7210-12LA	.31	.80	.40	7.5	1.02	.4960 / .4943

Inspect Delta-Rad™ socket using EB2G2000 Gauge.

Example of Complete Wrench Model Number:

EB2T7210 - 6LA

- 6LA → Fastener Diameter Size
- EB2T7210 → Tool Model Number

Note:
The nature of the installation of the Eddie-Bolt® 2 system results in a large drop in installation torque wrench forces as the installation is completed. Care should be exercised to avoid injury during manual installations as a result of this drop in resistance.

Double Ended 45° Offset Hand Wrench

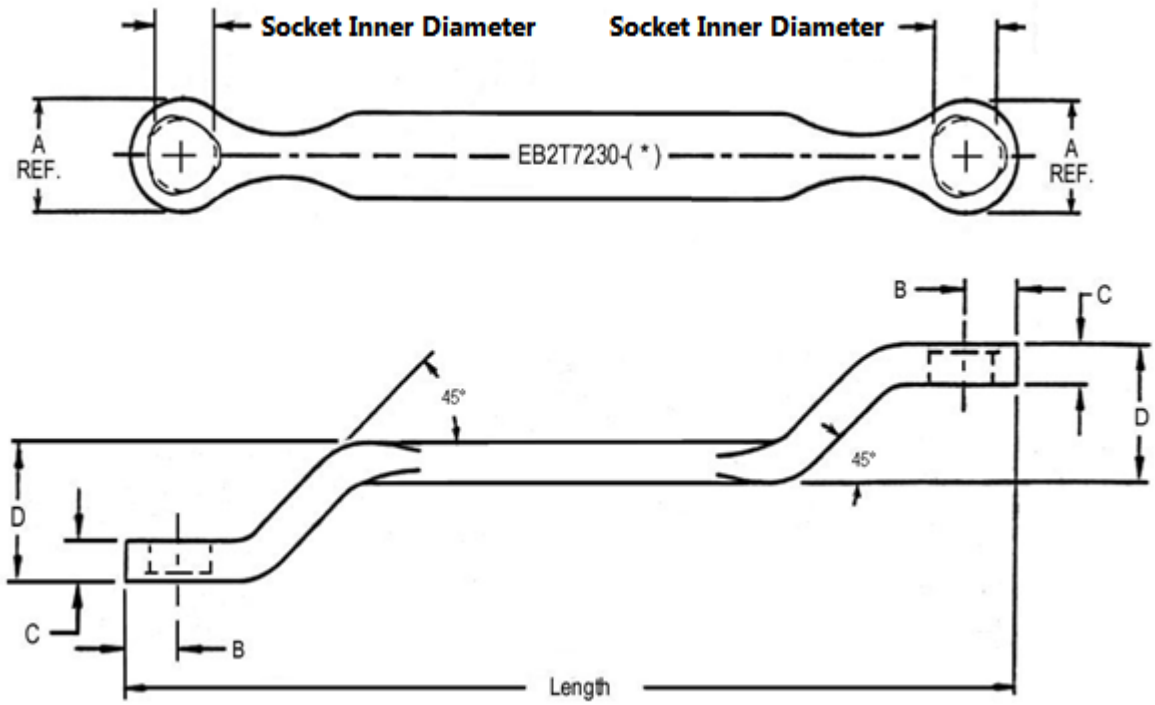

Fastener Dia.	Offset Wrench Part Number	A Dia. Ref.	B Max.	C Ref.	D Ref.	Length Ref.	Socket Inner Dia.
-5	EB2T7230-5LA	.44	.22	.21	.80	5.5	.2230 / .2215
-6	EB2T7230-6LA	.44	.22	.21	.80	5.5	.2470 / .2455
-8	EB2T7230-8LA	.54	.27	.26	.84	6.9	.3315 / .3300
-10	EB2T7230-10LA	.70	.35	.27	.88	6.9	.4015 / .4000
-12	EB2T7230-12LA	.80	.40	.31	1.02	8.7	.4960 / .4943

Inspect Delta-Rad™ socket using EB2G2000 Gauge.

Example of Complete Wrench Model Number:

EB2T7230 - 6LA

Fastener Diameter Size

Tool Model Number

Note:
The nature of the installation of the Eddie-Bolt® 2 system results in a large drop in installation torque wrench forces as the installation is completed. Care should be exercised to avoid injury during manual installations as a result of this drop in resistance.

Crowfoot Hand Ratchet Wrench

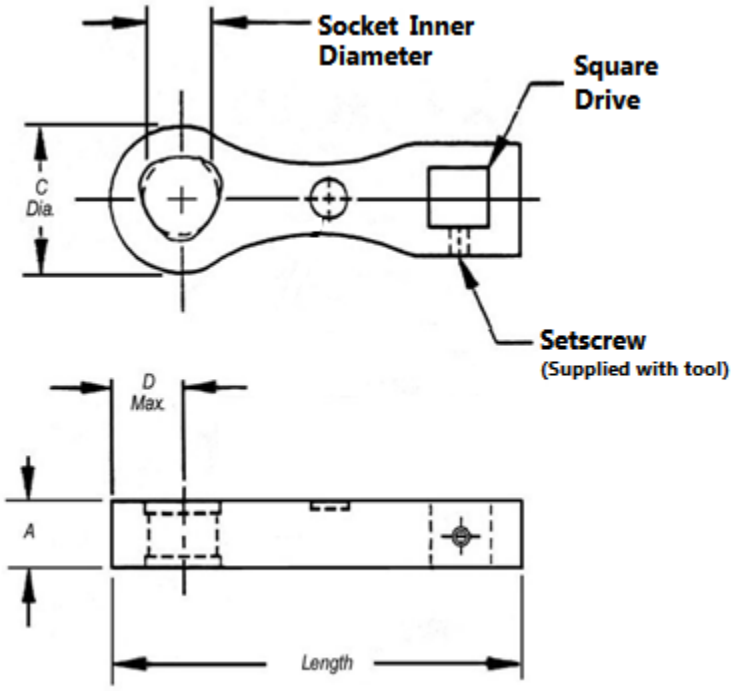

Fastener Dia.	Offset Wrench Part Number	A Ref.	Length Ref.	C Dia. Ref.	D Max.	Socket Diameter	Square Drive Size Ref.
-5	EB2T7300-5LA	.23	1.54	.44	.22	.2230 / .2215	1/4
-6	EB2T7300-6LA	.23	1.71	.44	.22	.2470 / .2455	1/4
-8	EB2T7300-8LA	.26	2.11	.54	.27	.3315 / .3300	1/4
-10	EB2T7300-10LA	.27	2.58	.70	.35	.4015 / .4000	3/8
-12	EB2T7300-12LA	.31	3.19	.80	.40	.4960 / .4943	3/8

Inspect Delta-Rad™ Driver using EB2G2000 Gauge.

Example of Complete Wrench Model Number:

EB2T7300 - 6LA

Fastener Diameter Size

Tool Model Number

Note:
The nature of the installation of the Eddie-Bolt® 2 system results in a large drop in installation torque wrench forces as the installation is completed. Care should be exercised to avoid injury during manual installations as a result of this drop in resistance.

Roller Wrenches

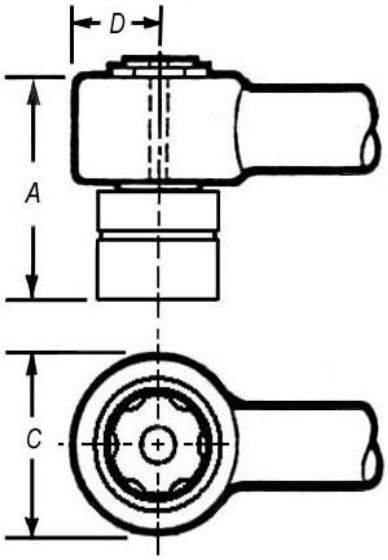

Fastener Dia.	Roller Wrench Part Number	A Ref.	Handle Length Ref.	C Dia. Ref.	D Max.	Socket Inner Dia.	
Integrated Sockets, Roller Wrenches							
-5	RWEB40-5	1.1	6.0	.57	.28	.2230 / .2215	
-6	RWEB40-6	1.1	6.0	.57	.28	.2470 / .2455	
-6	RWEB80-6	1.6	6.0	.57	.28	.2470 / .2455	
Square Drive Roller Wrenches (see note 2 below)						Square Drive	Rev.
-5	RWB100-40	1.3	6.0	.57	.28	1/4"	G
-5, -6	RWB100-80	1.8	6.0	.57	.28	1/4"	
-8	RWB100-130-312	2.0	7.4	.87	.44	5/16"	
-10, -12	RWB100-400	2.0	8.0	1.5	.74	3/8"	

1. Use EB2T4020 series sockets with RWB100 series roller wrenches
2. Inspect Delta-Rad™ socket using EB2G2000 Gauge

Note:
The nature of the installation of the Eddie-Bolt® 2 system results in a large drop in installation torque wrench forces as the installation is completed. Care should be exercised to avoid injury during manual installations as a result of this drop in resistance.

Sockets for Roller Wrenches

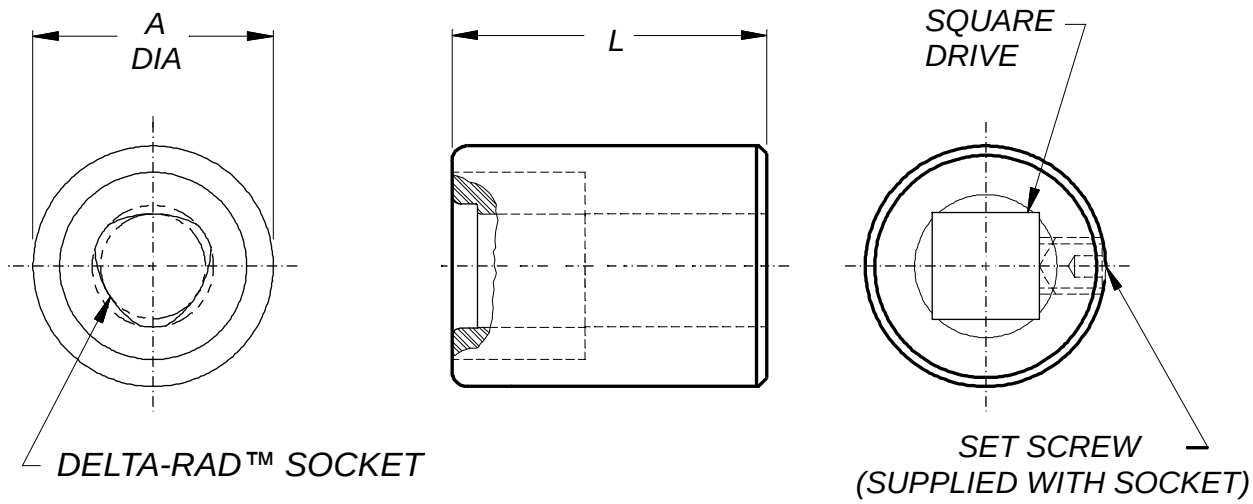

Nut Dia	Socket Part Number	"A" Dia. Ref.	Socket Inner Dia.	"L" Ref.	Ext'd Length	Square Drive Ref.	REV.
-5	EB2T4020-5	0.53	.2230 / .2215	0.74	Standard	1/4"	J
-5	EB2T4020-5-1	0.53	.2230 / .2215	1.74	1.0"	1/4"	J
-5	EB2T4020-5-3	0.53	.2230 / .2215	3.74	3.0"	1/4"	J
-6	EB2T4020-6	0.56	.2470 / .2455	0.74	Standard	1/4"	J
-6	EB2T4020-6-1	0.56	.2470 / .2455	1.74	1.0"	1/4"	J
-6	EB2T4020-6-3	0.56	.2470 / .2455	3.74	3.0"	1/4"	J
-8	EB2T4020-8-2	0.72	.3315 / .3300	0.79	Standard	5/16"	J
-8	EB2T4020-8-2-1	0.72	.3315 / .3300	1.79	1.0"	5/16"	J
-8	EB2T4020-8-2-2	0.72	.3315 / .3300	2.79	2.0"	5/16"	J
-8	EB2T4020-8-2-3	0.72	.3315 / .3300	3.79	3.0"	5/16"	J
-10	EB2T4020-10	0.77	.4015 / .4000	1.03	Standard	3/8"	J
-10	EB2T4020-10-1	0.77	.4015 / .4000	2.03	1.0"	3/8"	J
-10	EB2T4020-10-3	0.77	.4015 / .4000	4.03	3.0"	3/8"	J
-12	EB2T4020-12	0.89	.4960 / .4943	1.24	Standard	3/8"	J
-12	EB2T4020-12-1	0.89	.4960 / .4943	2.24	1.0"	3/8"	J
-12	EB2T4020-12-3	0.89	.4960 / .4943	4.24	3.0"	3/8"	J

Material: Insert: Carbide
Body: Alloy Steel, Heat Treated

Finish: Insert: None
Body: Black Oxide

Note:
The nature of the installation of the Eddie-Bolt® 2 system results in a large drop in installation torque wrench forces as the installation is completed. Care should be exercised to avoid injury during manual installations as a result of this drop in resistance.

Spline-Lok® Keys & Handles

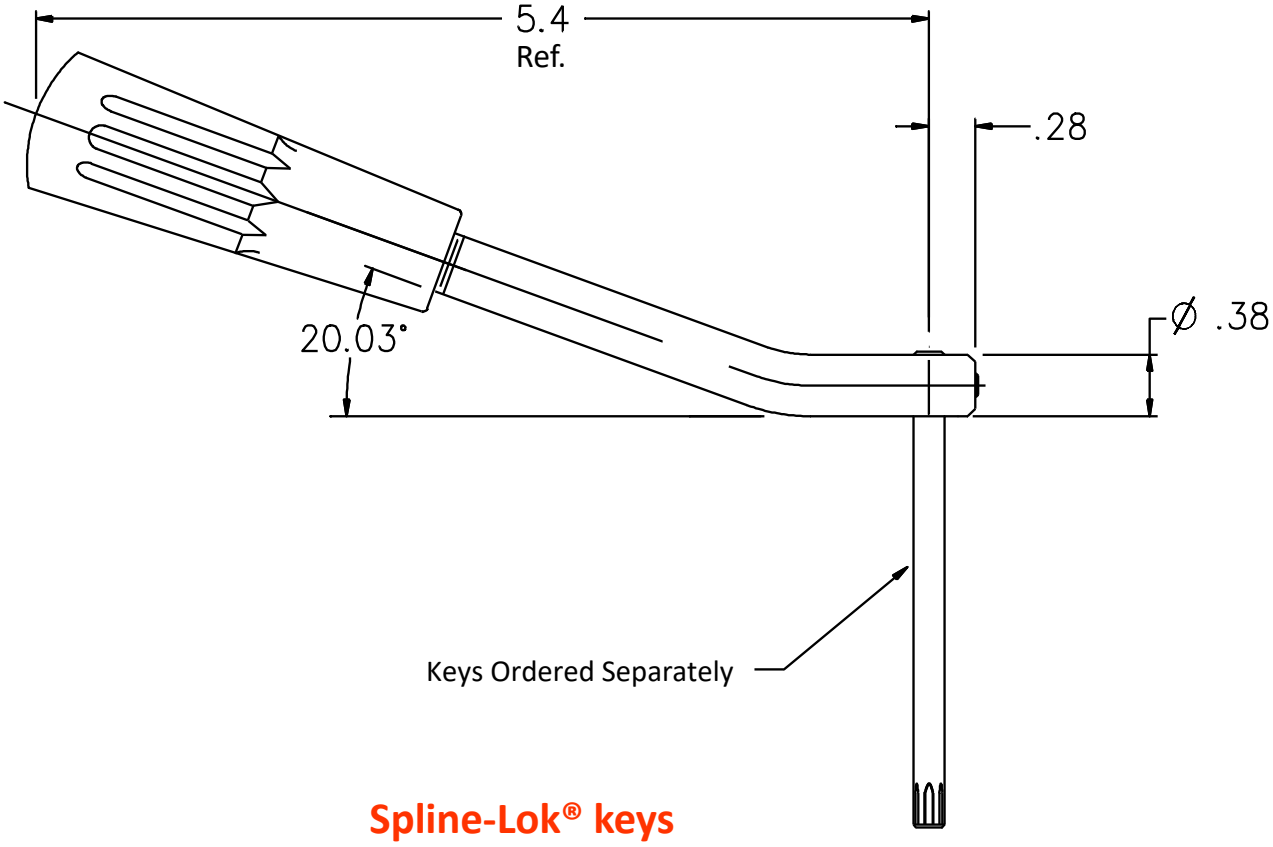

Fastener Diameter	Handle	Spline-Lok® keys		
		.825 Long	2.5" Long	5.0" Long
-5	SPKH5	093-9197	093-9198	093-9371
-6	SPKH6	093-9199	093-9200	093-9372
-8	SPKH8	093-9201	093-9202	093-9373
-10	SPKH10	093-9203	093-9204	093-9374
-12	SPKH12	093-9205	093-9206	093-9375

How to Order:

1. Order Handle Assembly Separately: SPKH(*)

2. Order Spline-Lok® keys Separately

Hex Keys & Handles

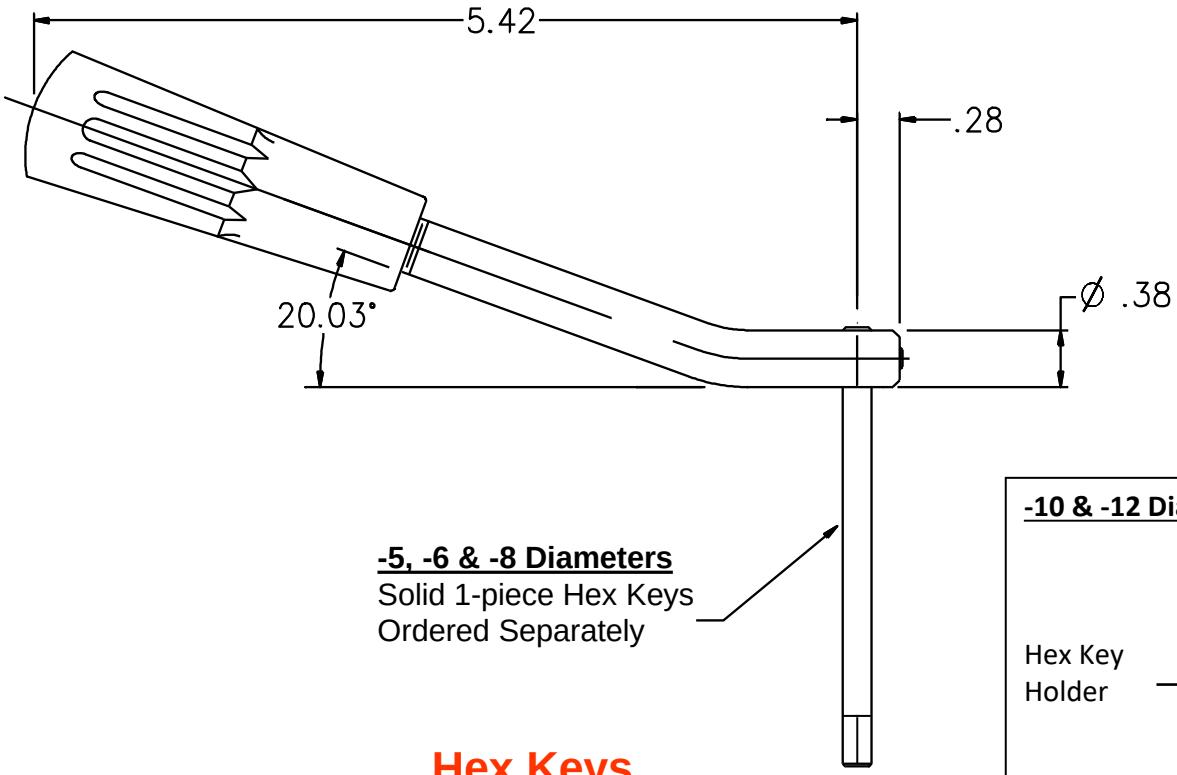

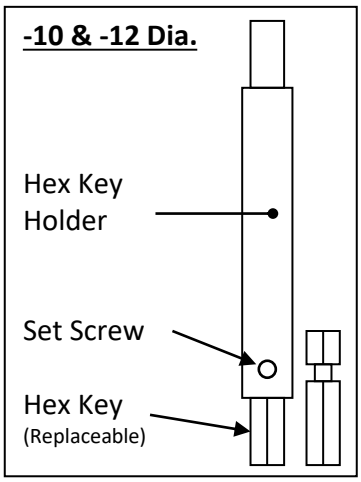

Hex Keys

Nut Dia.	Handle	Hex Key Size	Hex Keys Choices	
			.825 Long	2.5" Long
-5	SPKH6	.078 (5/64")	093-9322	093-9323
-6	SPKH6	.078 (5/64")	093-9322	093-9323
-8	SPKH8	.093 (3/32")	093-9324	093-9325

Nut Dia.	Handle	Hex Key Size	Hex Key Holders		Hex Key	Set Screw
			.825 Long	2.5" Long		
-10	SPKH10	.125 (1/8")	016-9867	016-9868	093-9008	065-9031
-12	SPKH12	.156 (5/32")	016-9869	016-9870	093-9032	065-9031
-14	SPKH14	.187 (3/16")	016-9xxx	016-9xxx	093-9096	065-9031

How to Order:

1. Order Handle Assembly Separately: SPKH(*)
2. Order Hex Key Holder, Hex Keys & Set Screws Separately

Spline-Lok® keys

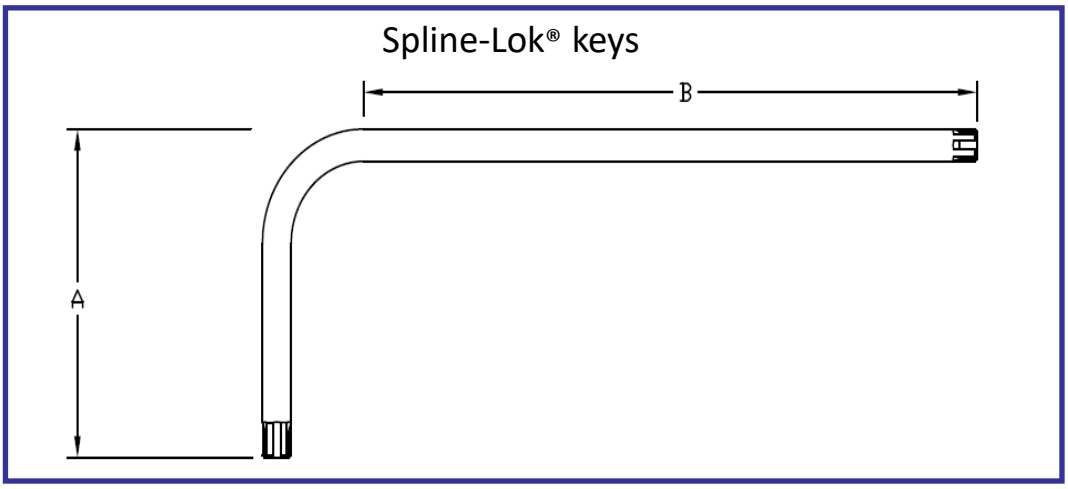

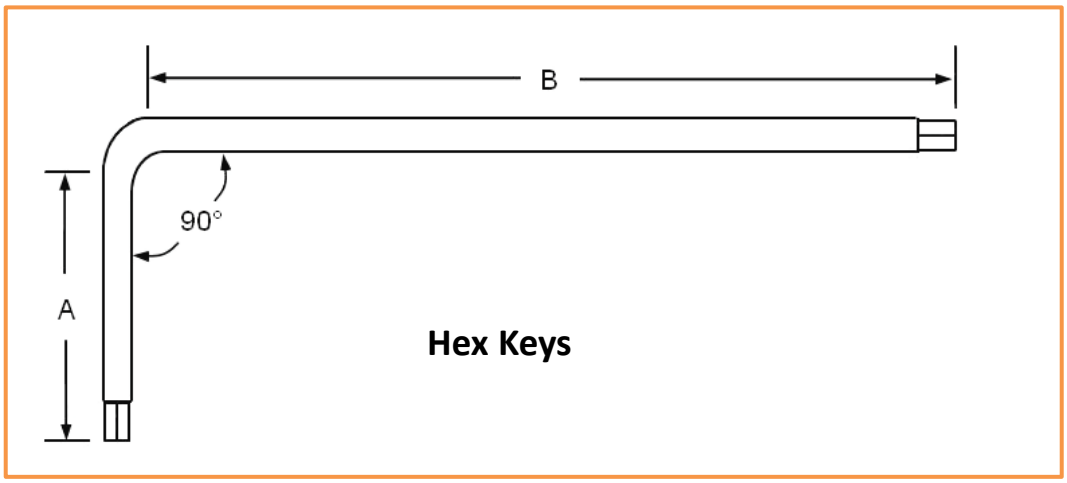

Caution: Keys are to be used with hand installation tools only

Spline-Lok® keys

Part Number	Dia.	"A" Ref.	"B" Ref.
SPK650-5-1	-5	0.80	3.50
SPK650-5-2	-5	1.04	3.50
SPK650-5-4	-5	2.51	2.77
SPK650-6-1	-6	0.80	3.50
SPK650-6-2	-6	1.07	3.50
SPK650-6-4	-6	1.75	3.50
SPK650-8-1	-8	0.98	3.40
SPK650-8-2	-8	1.23	3.60
SPK650-8-3	-8	0.56	3.78
SPK650-8-4	-8	1.75	3.40
SPK650-10-1	-10	1.25	3.22
SPK650-10-2	-10	1.00	3.75
SPK650-12-1	-12	1.25	3.5

Hex Keys

Hex Key Part Number	Screw Dia.	Hex Size	"A" Ref. (inches)	"B" Ref. (inches)
HK650-078-1	-5, -6	5/64" (.078)	0.50	3.20
HK650-078-2	-5, -6	5/64" (.078)	0.75	3.20
HK650-078-3	-5, -6	5/64" (.078)	2.09	4.45
HK650-094-1	-8	3/32" (.094)	0.50	3.50
HK650-094-2	-8	3/32" (.094)	0.75	3.25
HK650-094-3	-8	3/32" (.094)	2.09	4.45
HK650-125-4	-10	1/8" (.125)	1.25	5.25
HK650-125-3	-10	1/8" (.125)	2.40	4.10
HK650-156-3	-12	5/32" (.156)	2.40	4.10
HK650-156-4	-12	5/32" (.156)	1.25	5.25

Spline-Lok® keys

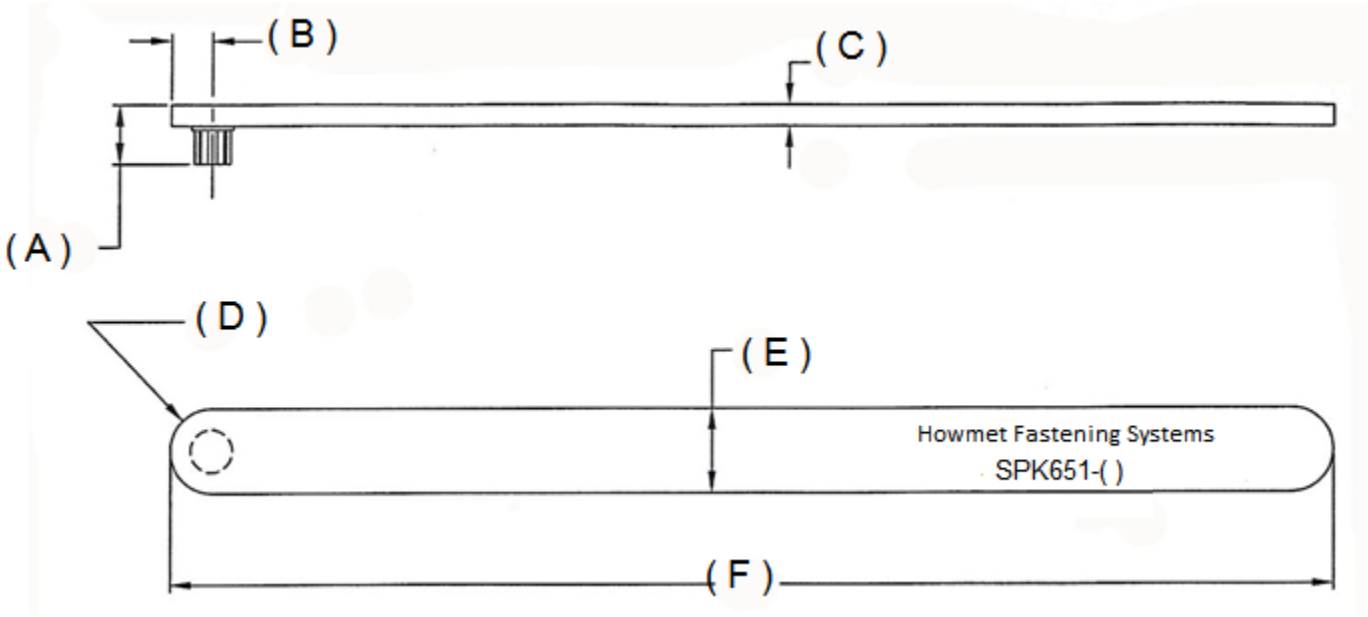

Fastener Diameter	WRENCH PART NUMBER	A REF	B REF +.000 −.015	C REF	D REF	E REF	F REF
−5	SPK651−5	.250	.156	.12	FULL RAD.	.31	4.0
−6	SPK651−6	.275	.156	.12	FULL RAD.	.31	4.0
−8	SPK651−8	.275	.156	.12	FULL RAD.	.31	4.0
−10	SPK651−10	.310	.250	.12	FULL RAD.	.50	8.0
−10−1	SPK651−10−1	.500	.250	.12	FULL RAD.	.50	8.0
−12	SPK651−12	.350	.250	.12	FULL RAD.	.50	8.0

SECTION 4

Removal Tools

HOWMET AEROSPACE

Removal Power Tools

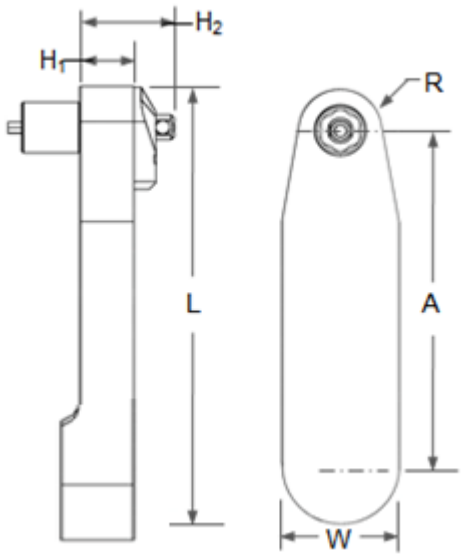

Model Number	No. of Gears	A	H_1	H_2	L	R
ETLR1149	4	1.96 [49.8mm]	.47 [11.9mm]	.61 [15.4mm]	2.81 [71.4mm]	.35 [8.8mm]

This removal socket tool runs in a counter-clockwise direction to remove Eddie-Bolt® 2 fasteners. Tool is also equipped with a Spline-Lok® key to keep the pin from turning during the nut removal process.

Table 1
Fastener Diameter

Dash	Diameter
05	5/32"
06	3/16"
08	1/4"

Table 2
Ext'd.Socket Length

Code	Extension
D	1/2"
G	1.0"
J	2.0"

Table 3
Spline Keys

Code	Size
05SPK	5/32" Dia. Spline Bit
06SPK	3/16" Dia. Spline Bit
08SPK	1/4" Dia. Spline Bit

Table 4
Drive Shaft Extended Length

Code	Length	Index Unit
A	-	With
C	2.0"	With

Example of Complete Tool Model Number:

ETLR1149 C 06 G 06SPK

- 06SPK — Spline Key Size(Table 3)
- G — Extended Socket Length (Table 2)
- 06 — Fastener Diameter (Table 1)
- C — Ext'd. Drive Shaft (Table 4)
- ETLR1149 — Tool Model Number

Removal Power Tools

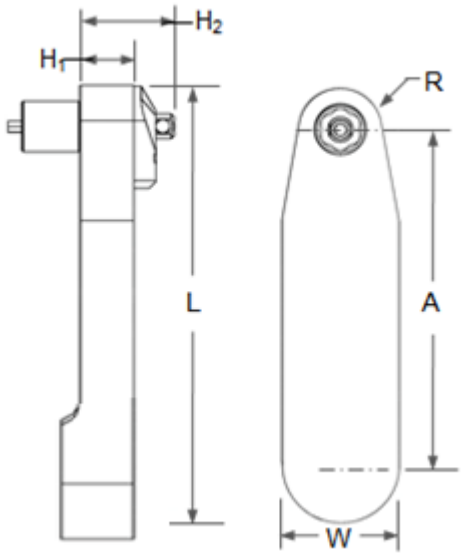

Model Number	No. of Gears	A	H_1	H_2	L	R
ETLR1129	5	2.68 [68.1mm]	.47 [11.9mm]	.61 [15.4mm]	3.53 [89.7mm]	.35 [8.8mm]

This removal socket tool runs in a counter-clockwise direction to remove Eddie-Bolt® 2 fasteners. Tool is also equipped with a Spline-Lok® key to keep the pin from turning during the nut removal process.

Table 1
Fastener Diameter

Dash	Diameter
05	5/32"
06	3/16"
08	1/4"

Table 2
Ext'd.Socket Length

Code	Extension
D	1/2"
G	1.0"
J	2.0"

Table 3
Spline Keys

Code	Size
05SPK	5/32" Dia. Spline Bit
06SPK	3/16" Dia. Spline Bit
08SPK	1/4" Dia. Spline Bit

Table 4
Drive Shaft Extended Length

Code	Length	Index Unit
A	-	With
C	2.0"	With

Example of Complete Tool Model Number:

ETLR1129 C 06 G 06SPK

- 06SPK — Spline Key Size(Table 3)
- G — Extended Socket Length (Table 2)
- 06 — Fastener Diameter (Table 1)
- C — Ext'd. Drive Shaft (Table 4)
- ETLR1129 — Tool Model Number

Removal Sockets and Roller Wrenches

EBRTS9000-(*)
Removal Socket

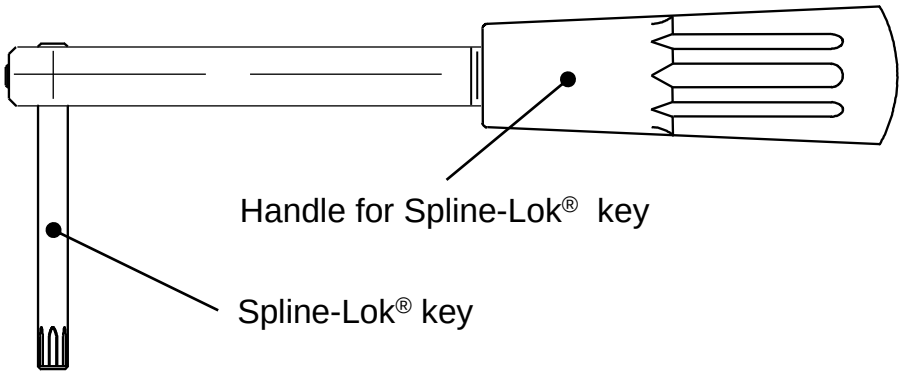

Roller Wrench Removal Tools for Eddie-Bolt® 2 nuts

Fastener Dia.	Roller Wrench	Removal Socket	Spline Key	Handle for Spline Key
-5	EBRT9001	EBRTS9000-5	093-9198	SPKH5S
-6	EBRT9001	EBRTS9000-6	093-9200	SPKH6S

Note: EBRT9001 reverse roller wrench has a 3/8” square drive

Removal Sockets and Roller Wrenches

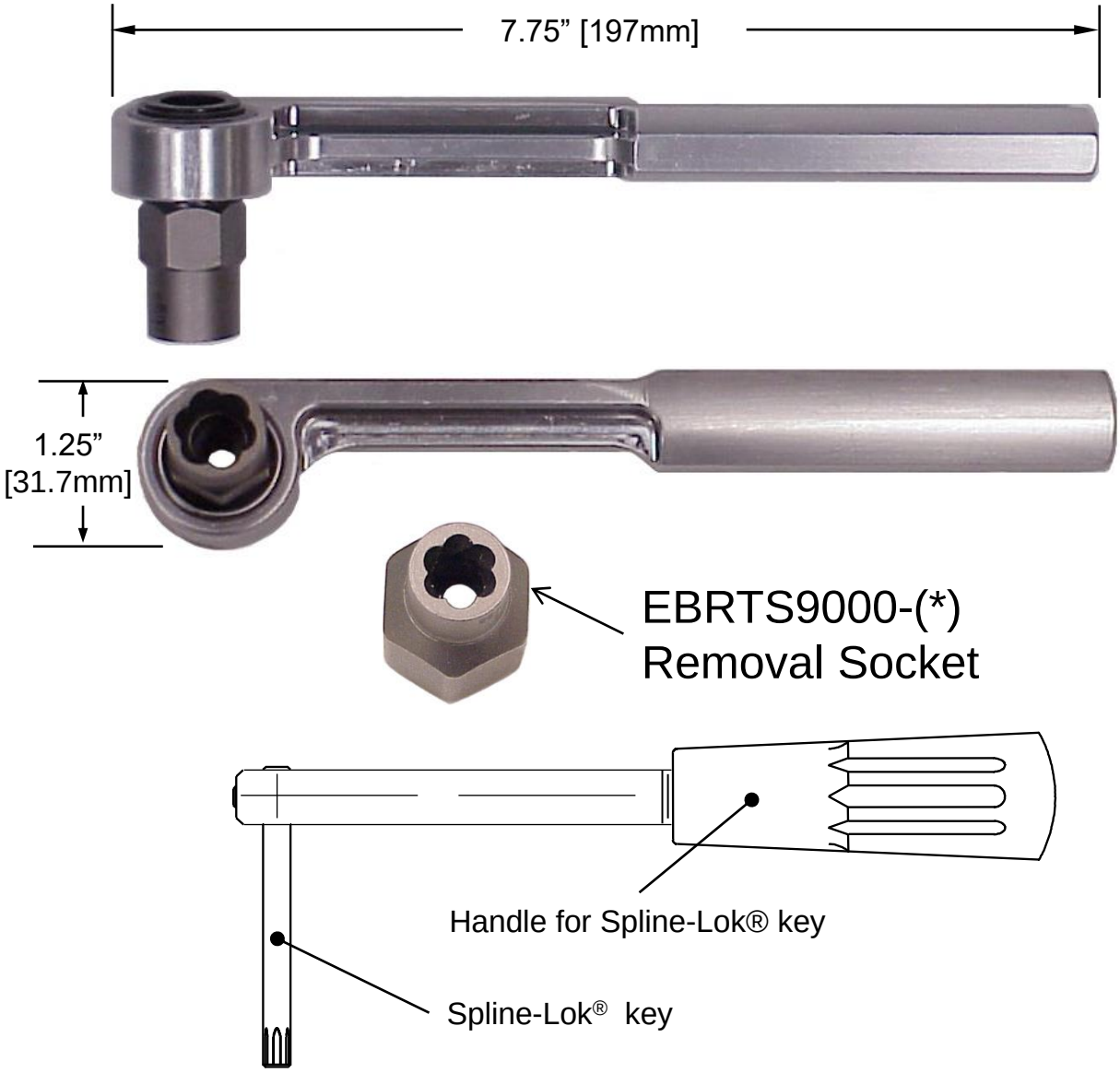

Roller Wrench Removal Tools for Eddie-Bolt® 2 nuts

Fastener Dia.	Roller Wrench	Removal Socket	Spline Key	Handle for Spline Key
-8	EBRT9000	EBRTS9000-8	093-9202	SPKH8S
-10	EBRT9000	EBRTS9000-10	093-9204	SPKH10S
-12	EBRT9000	EBRTS9000-12	093-9206	SPKH12S

Note: EBRT9000 reverse roller wrench has a 3/8” square drive

Hand Removal Tool with Spline Keys

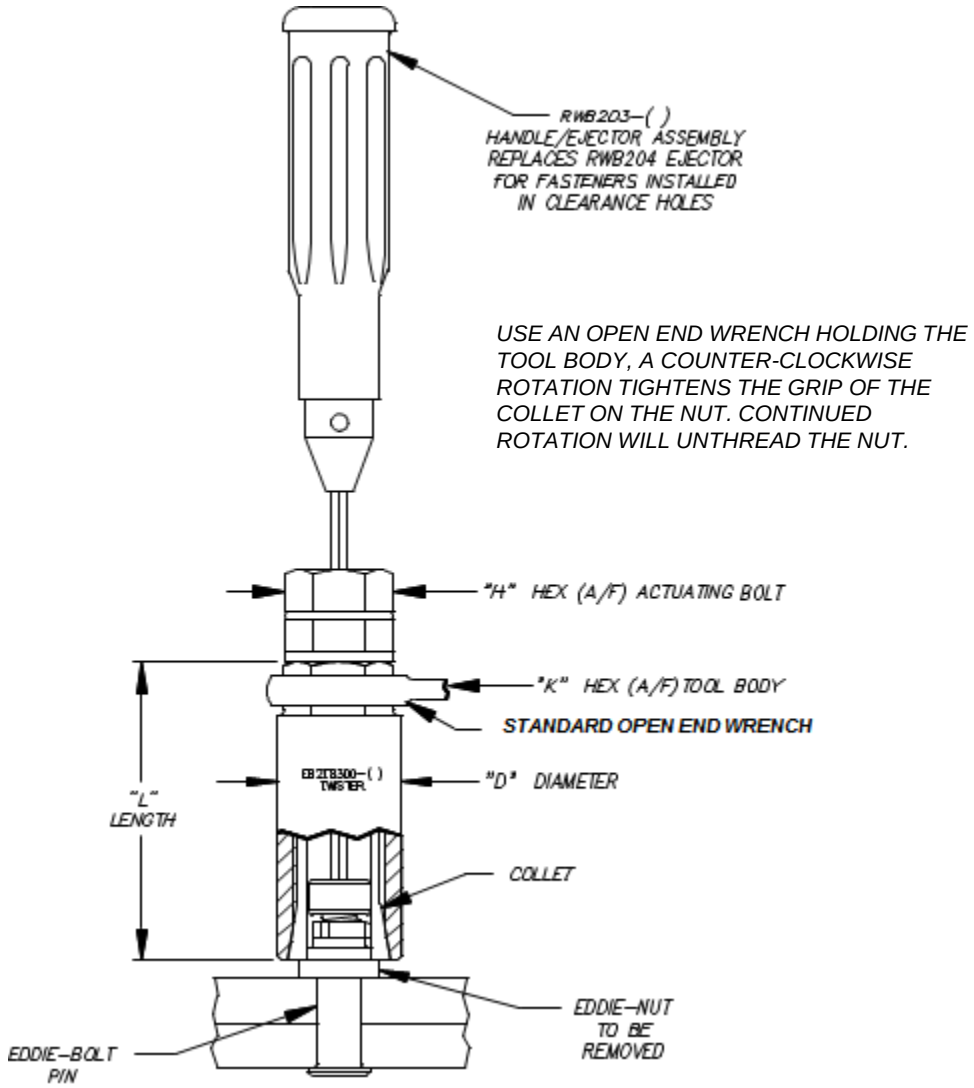

NOTES:

- The collet grips the lobed ends of the Eddie-Bolt® 2 fasteners to remove them from the Eddie-Bolt® 2 fastener pins.

Removal Tool Part Number	Tool Body			"H" Hex (A/F)	Handle / Ejector Assembly	Handle Only	Spline Bit Only	Collet (Order Number)
	"D" Dia.	"K" Hex (A/F)	"L" Length					
EB2T8300-05SPK	.56	7/16	1.17	7/16	RWB203-05SPK	098-9121	093-9207	100714-007
EB2T8300-06SPK	.56	7/16	1.17	7/16	RWB203-06SPK	098-9122	093-9208	100714-008
EB2T8300-08SPK	.75	9/16	1.58	1/2	RWB203-08SPK	098-9123	093-9209	100714-009
EB2T8300-10SPK	.95	11/16	2.00	9/16	RWB203-10SPK	098-9124	093-9210	100714-005E
EB2T8300-12SPK	1.17	13/16	2.47	3/4	RWB203-12SPK	098-9125	093-9211	100714-006E

Note: -12 Diameter is currently only available in a hex key configuration, see EB2T8300-12N

Hand Removal Tool with Hex Keys

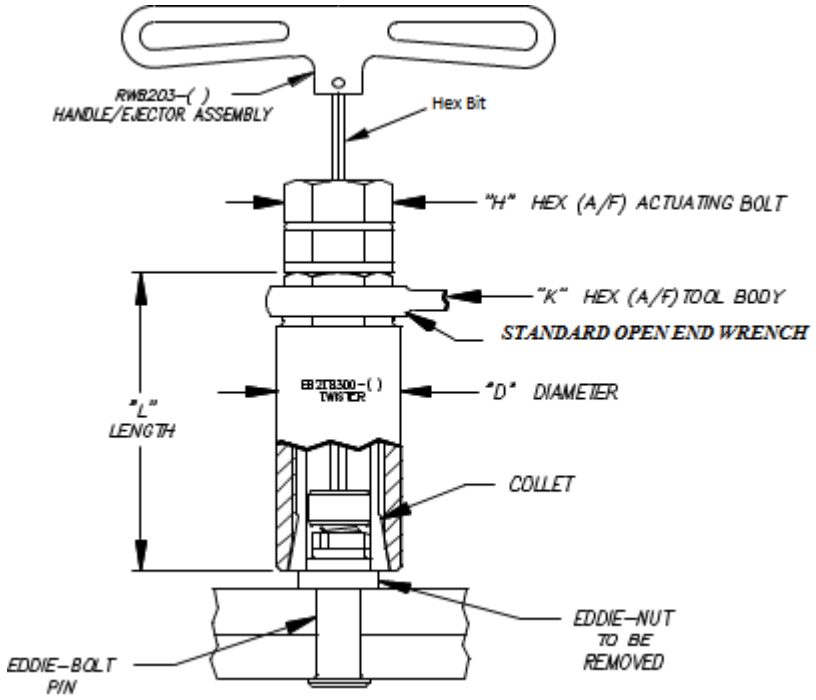

USE AN OPEN END WRENCH TO HOLD THE TOOL BODY, A COUNTER-CLOCKWISE ROTATION TIGHTENS THE GRIP OF THE COLLET ON THE NUT. CONTINUED ROTATION WILL UNTHREAD THE NUT.

NOTES:

- The collet grips the lobed ends of the Eddie-Bolt® 2 fasteners to remove them from the Eddie-Bolt® 2 fastener pins.

Will not work with Spline-Lok® keys, hex keys only

Nut Dia.	Removal Tool Part Number	Tool Body			"H" Hex (A/F)	Handle / Ejector Assembly	Handle Only	Hex Bit Only
		"D" Dia.	"K" Hex (A/F)	"L" Length				
-12	EB2T8300-12N	1.17	13/16	2.47	3/4	RWB203-15E	098-9132	093-9345
-14	EB2T8300-14N	TBD	TBD	TBD	TBD	RWB203-18E	098-9133	093-9346
-16	EB2T8300-16N	TBD	TBD	TBD	TBD	RWB203-21E	098-9134	093-9347

Crowsfoot Removal Tool

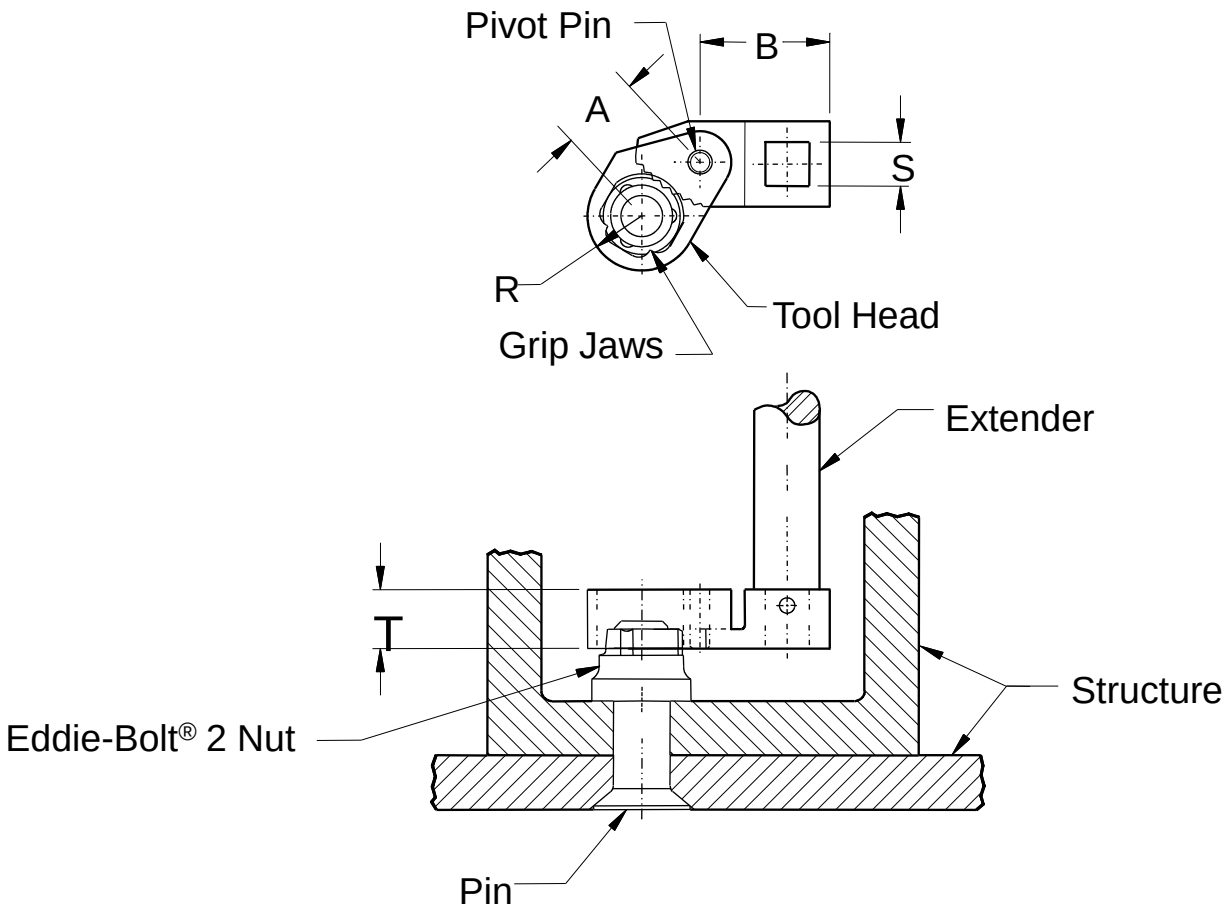

View Shows Tool Gripping
Nut at Lobed End

NOTES:

- THIS CROW FOOT TYPE RATCHET REMOVAL TOOL IS USED WITH AN EXTENDER OF VARYING LENGTH (PROVIDED BY USER) ALLOWS REMOVAL OF NUTS LOCATED IN DEEP CHANNELS OR IN VERY RESTRICTED AREAS.

- THE TOOL GRIPS THE LOBED ENDS OF NUTS TO REMOVE THEM FROM PINS.

Fastener Diameter	Removal Tool Part Number	T	R	A	B	S
-5	EBRT100-5CF	.28	.28	.36	.66	.25
-6	EBRT100-6CF	.28	.28	.36	.66	.25
-8	EBRT100-8CF	.28	.28	.51	.76	.25
-10	EBRT100-10CF	.37	.35	.56	1.01	.37
-12	EBRT100-12CF	.47	.43	.81	1.16	.37

Hand Removal Wrench

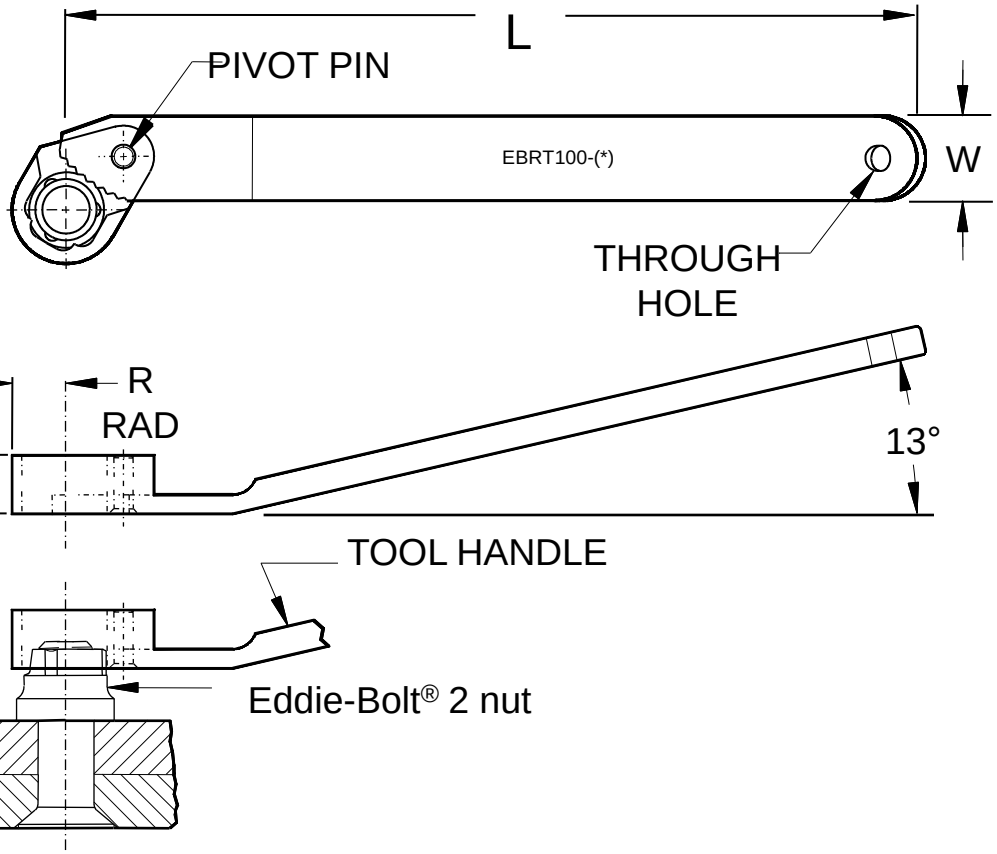

VIEW SHOWS TOOL GRIPPING
NUT AT LOBED END

Note:
- Ratchet type removal tool securely grips Eddie-Bolt® 2 nuts at the lobed ends for their easy removal.
- EBRT100-(*)S indicates a straight handle

Fastener Diameter	Tool Model Number	T	R	L	W
-5	EBRT100-5	.28	.28	5.60	.42
-6	EBRT100-6	.28	.28	5.60	.42
-8	EBRT100-8	.28	.28	5.60	.55
-10	EBRT100-10	.38	.35	5.80	.55
-12	EBRT100-12	.47	.43	6.90	.67

Dwg Rev: (-8 dia) “W” dimension changed from .42 to .55 on 4-22-10

Hand Removal Wrenches

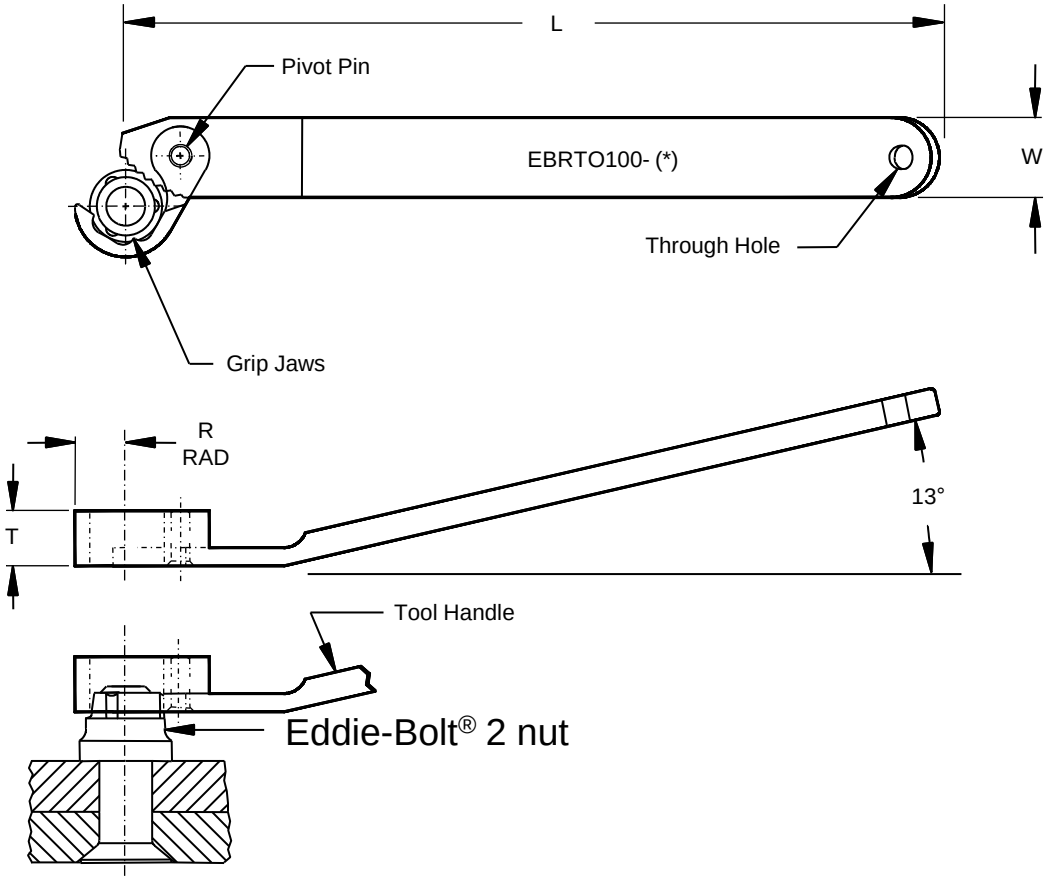

Note:
- Ratchet Type Removal Tool Securely Grips Eddie-Bolt® 2 Nuts at the lobed ends for their easy removal.

Fastener Diameter	Tool Model Number	T	R	L	W
-5	EBRTO100-5	.28	.28	5.60	.42
-6	EBRTO100-6	.28	.28	5.60	.42
-8	EBRTO100-8	.28	.28	5.60	.42
-10	EBRTO100-10	.38	.35	5.80	.55
-12	EBRTO100-12	.47	.43	6.90	.67

SECTION 5

Inspection Gauges

HOWMET AEROSPACE

Paddle Gauges for Inspection of Nut Swage

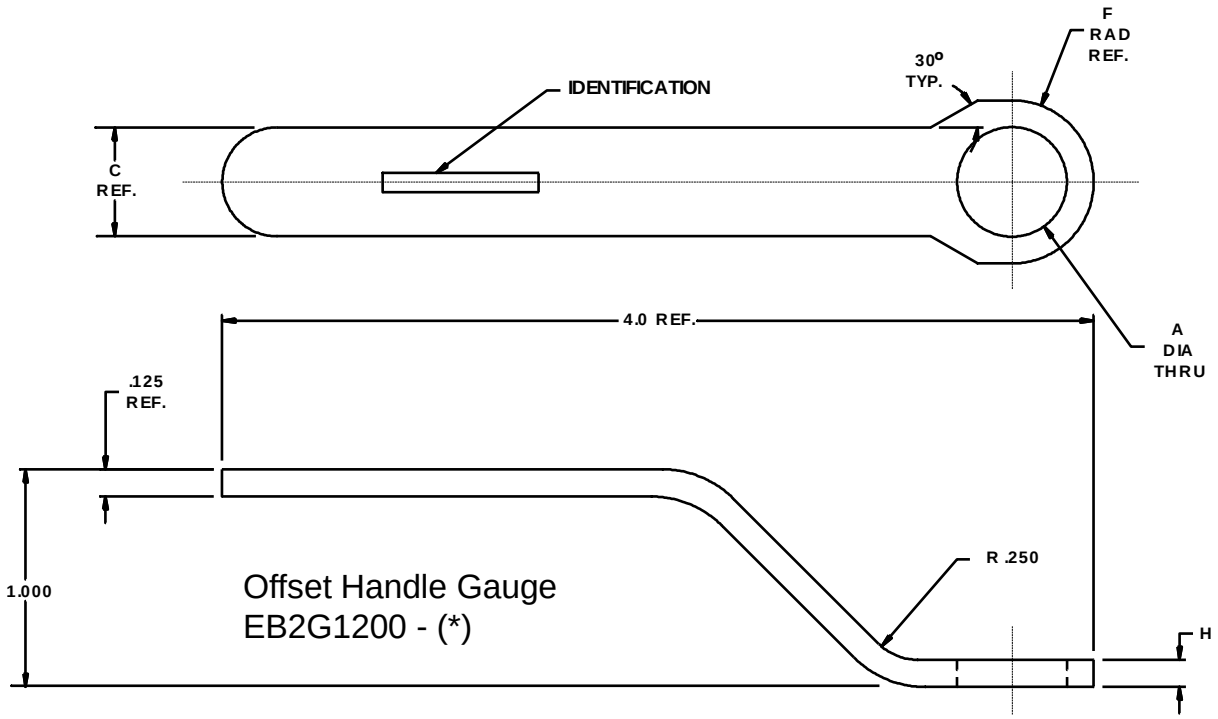

STRAIGHT HANDLE GAUGE	OFFSET HANDLE GAUGE	A DIA.	C REF	F RADIUS	H REF
EB2G1100-5	EB2G1200-5	.2295 .2280	.250	.250	.125
EB2G1100-6	EB2G1200-6	.2535 .2520	.250	.250	.125
EB2G1100-8	EB2G1200-8	.3400 .3385	.375	.312	.125
EB2G1100-10	EB2G1200-10	.4115 .4100	.375	.375	.125
EB2G1100-12	EB2G1200-12	.5075 .5060	.500	.375	.125

Note: This gauge is used to inspect an installed Eddie-Bolt® 2 nut to make certain it is fully swaged. It is to be used as a “Go / No Go” gauge. If the gauge fits over the installed fastener it is a “Go” and if the gauge does not fit over the fastener it is considered a “No Go”.

Cylindrical Type, Nut Inspection Gauge

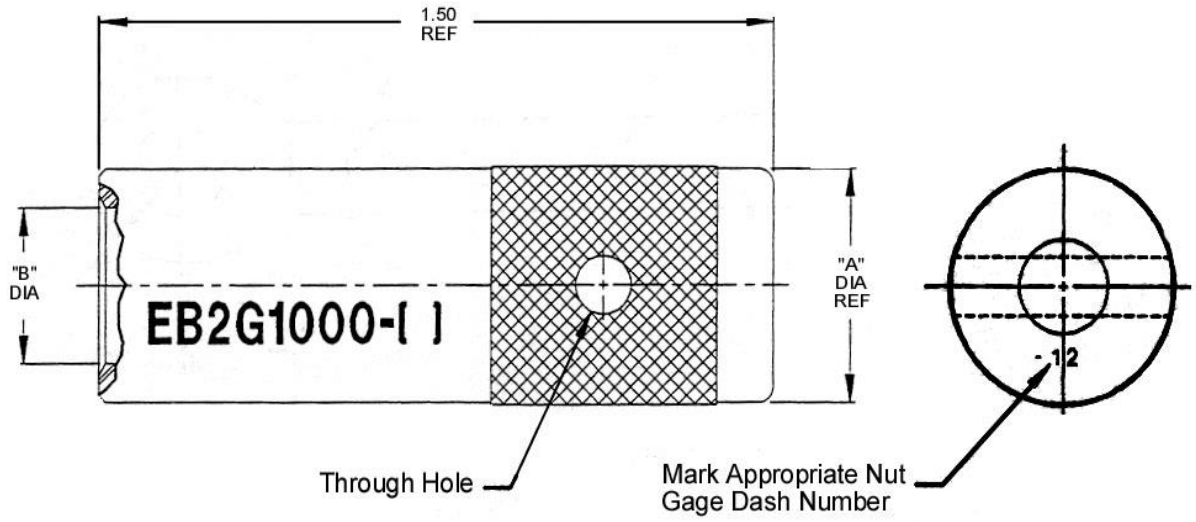

Nut Gauge Dash Number	Nut Gauge Part Number	"A" DIA REF	"B" DIA.	C DIM MIN	REV.
-5	EB2G1000-5	.375	.2295 .2280	.150	M
-6	EB2G1000-6	.375	.2535 .2520	.150	M
-8	EB2G1000-8	.500	.3400 .3385	.250	M
-10	EB2G1000-10	.625	.4115 .4100	.250	M
-12	EB2G1000-12	.750	.5075 .5060	.275	M

Material: Stainless Steel, Heat Treated
Finish: None

Example of Part Number

EB2G1000 - 5

Designates Gauge Dia. Size

Basic Part Number

Master Pin Gauge

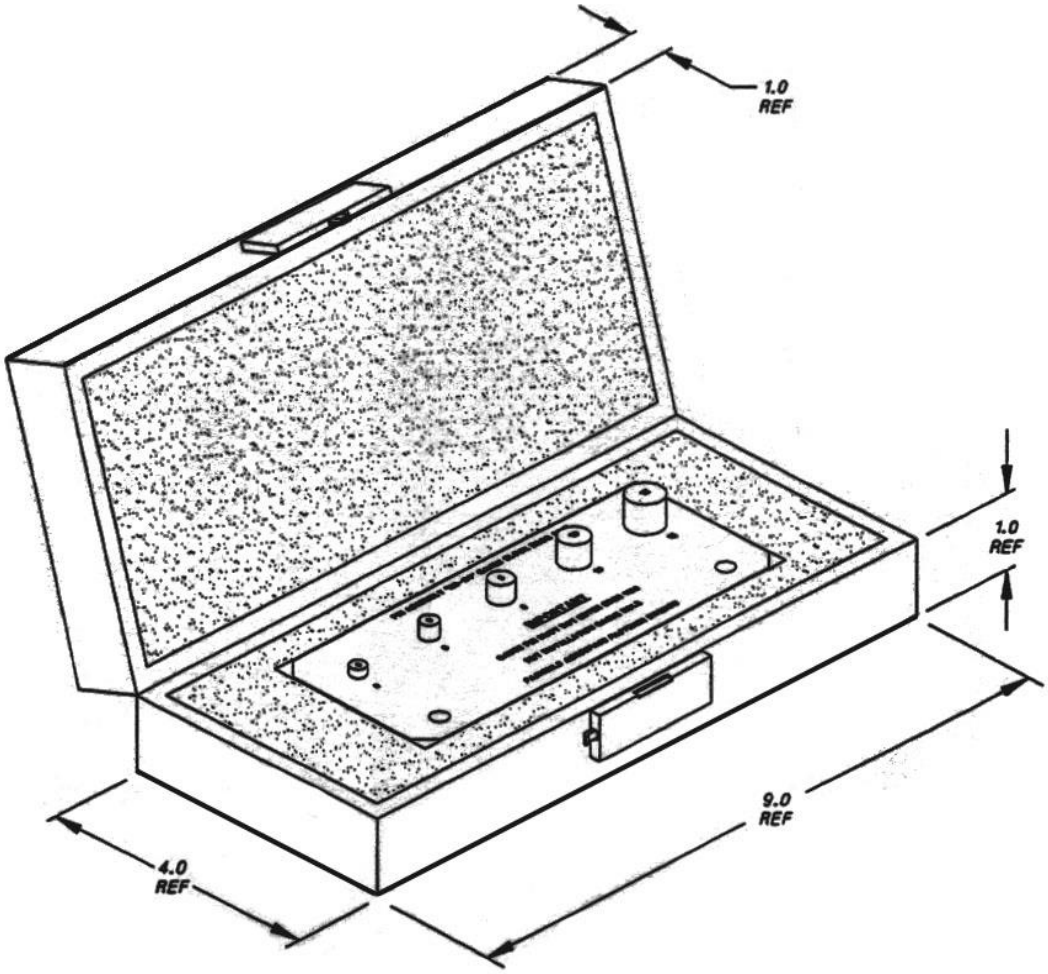

Note:

Part Number: EB2G2010

The Master Pin Gauge is for checking wear on the Paddle and Cylindrical Nut Inspection Gauges

Driver / Socket Inspection Gauge

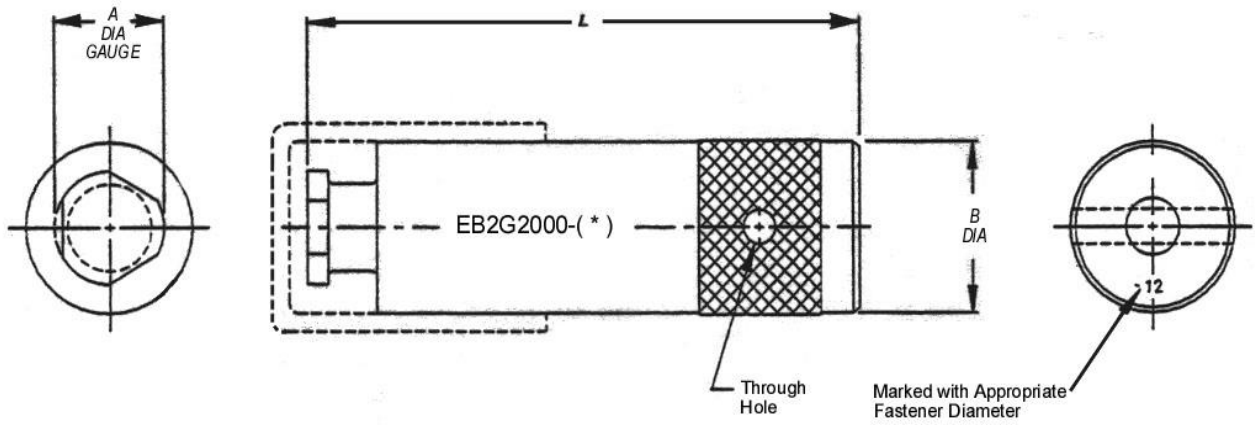

Driver Inspection Diameter	Driver Inspection Part Number	"A" DIA Gauge +.0002 -.0002	"B" DIA REF	"L" REF
-5	EB2G2000-5	.2235	.375	1.250
-6	EB2G2000-6	.2475	.375	1.250
-8	EB2G2000-8	.3330	.500	1.375
-10	EB2G2000-10	.4035	.625	1.562
-12	EB2G2000-12	.4985	.750	1.625

Material: Stainless Steel, Heat Treated
Finish: None

Example of
Part Number:

EB2G2000 - 5

Designates Gauge Dia. Size

Basic Part Number

Refer to next page for Inspection Procedure

Driver / Socket Inspection Gauge

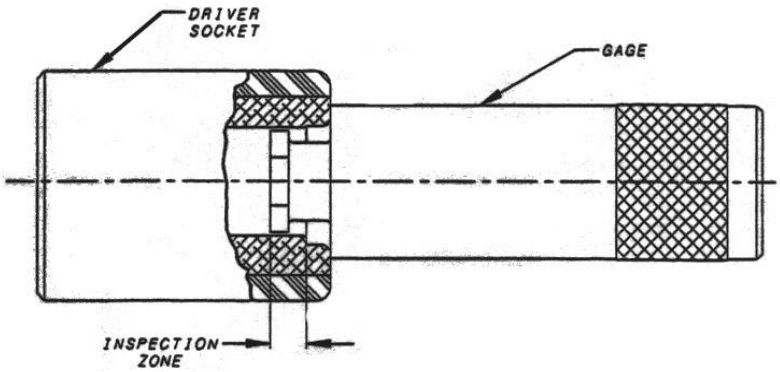

FIGURE 1

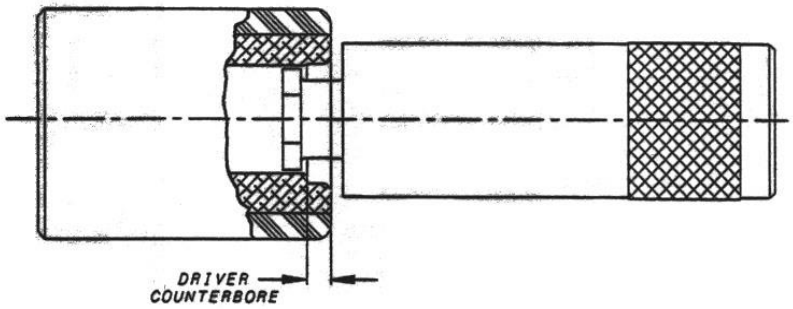

FIGURE 2

Part Number: EB2G2000- (*)

INSPECTION PROCEDURE:

1. INSERT GAUGE FULLY INTO DRIVER BETWEEN THE DRIVING RADII PER FIGURE 1, THEN ROTATE THE GAUGE.

2. WHILE CONTINUING TO ATTEMPT TO RATATE, MOVE THE GAUGE OUT TOWARD THE DRIVER COUNTERBORE PER FIGURE 2.

ACCEPT: GAUGE **DOES NOT** ROTATE OVER THE DRIVING RADII MORE THAN 90° IN ANY AREA OF INPECTION ZONE.
REJECT: GAUGE **DOES** ROTATE OVER THE DRIVING RADII MORE THAN 90° IN ANY AREA OF INSPECTION ZONE.

Grip Gauge for Selection of Proper Pin Grip Length - “EB2G1400”

NOTES:

1. THIS GRIP GAGE IS USED WITH THE EDDIE–BOLT®2 FASTENING SYSTEM.
2. THE GRIP GAGE SIMPLIFIES THE MEASURING OF THE WORK THICKNESS AND THE RELATED LENGTH IN INCH OR METRIC INCREMENTS OF BOTH FLUSH AND PROTRUDING HEAD PINS.
3. GRIP AND SLIDE GAGE MATERIAL: .020 THICK STAINLESS STEEL.
4. FINISH: SATIN FINISH, INCH MARKINGS IN BLACK AND METRIC MARKINGS ARE IN ORANGE.

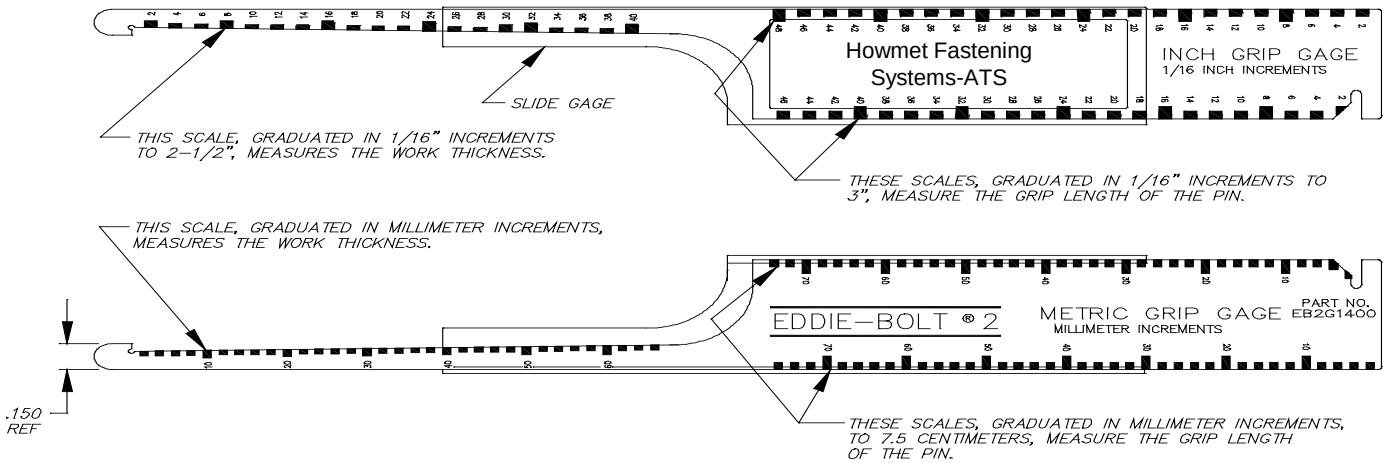

HOW TO USE

TO MEASURE THE WORK THICKNESS, HOOK THE GAGE ON TO THE BACKSIDE AS SHOWN IN FIGURE 1 AND 2 BELOW. READ THE SCALE NUMBER EVEN WITH THE WORK SURFACE.

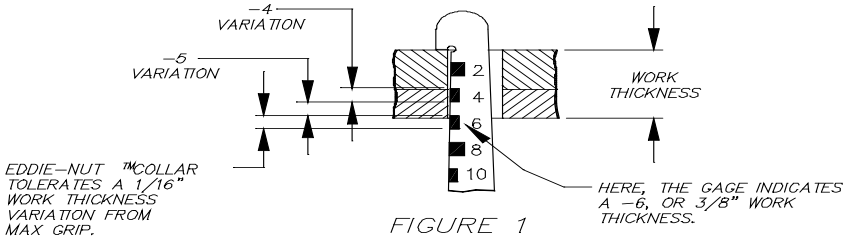

FIGURE 1

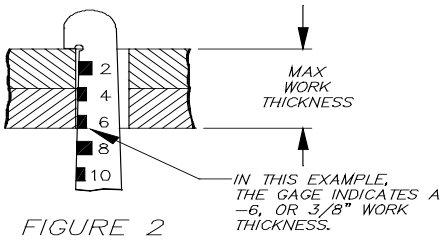

FIGURE 2

TO MEASURE THE GRIP LENGTH OF THE PIN, PLACE THE PIN, DEPENDING ON THE HEAD TYPE, AGAINST THE GAGE AS SHOWN IN FIGURE 3 AND 4 BELOW. READ THE HIGHEST NUMBER OPPOSITE THE GRIP OF THE FULL SHANK DIAMETER.

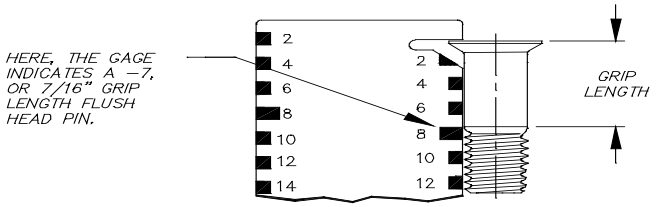

FIGURE 3

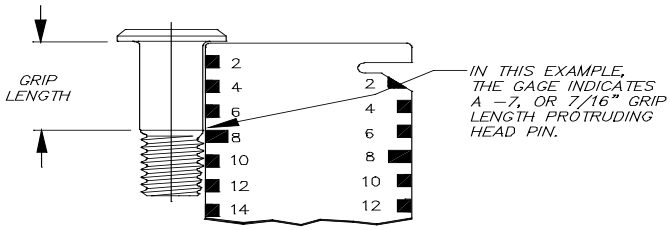

FIGURE 4

Pin Protrusion Gauge

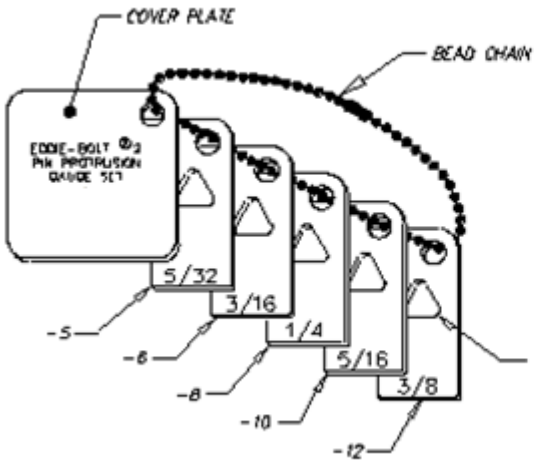

TRIANGULAR SHAPED HOLE IN GAUGE INDENTIFIES EDDIE-BOLT 2 USAGE

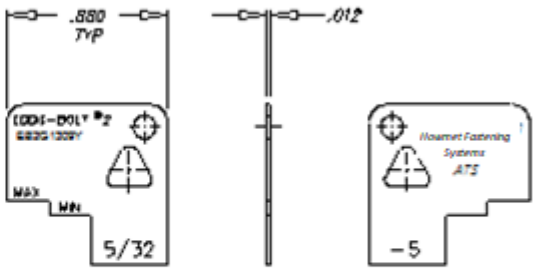

TYPICAL GAUGE SET COMPONENT, SHOWING LETTERING

GAUGE SET PART NUMBER	GAUGE SIZE DASH NUMBER	PIN NOMINAL DIA.	MAX PROTRUSION	MIN PROTRUSION
EB2G1309	-5	5/32	.358	.275
	-6	3/16	.378	.295
	-8	1/4	.423	.340
	-10	5/16	.518	.435
	-12	3/8	.558	.475

This item is sold as a gauge set only. EB2G1309

1. Individual gages are assembled on a chain as shown.
2. This gage is for standard and 1/64” oversize pin diameters

Pin Protrusion Gauge

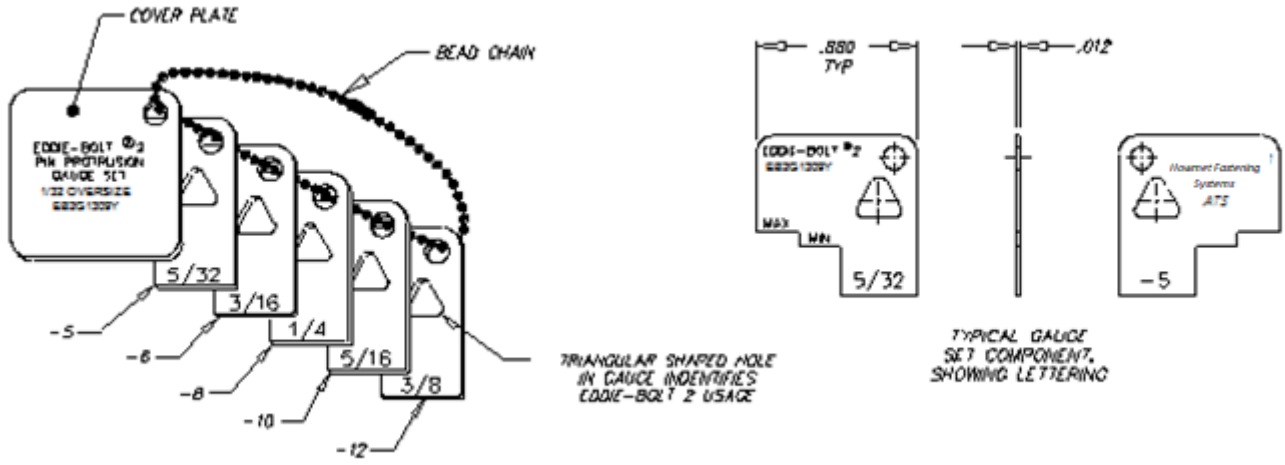

OVERSIZE PROTRUSION GAUGE SET

GAUGE SET PART NUMBER	GAUGE SIZE DASH NUMBER	PIN NOMINAL DIA.	MAX. PROTRUSION	MIN. PROTRUSION
EB2G1309Y	-6Y	3/16	.397	.315
	-8Y	1/4	.457	.375
	-10Y	5/16	.562	.480
	-12Y	3/8	.602	.520

This item is sold as a gauge set only. EB2G1309Y

1. Individual gages are assembled on a chain as shown.
2. This gage is for standard and 1/64” oversize pin diameters

New Tool Application Form

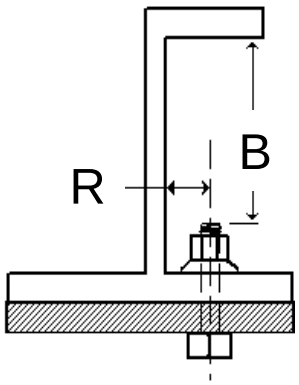

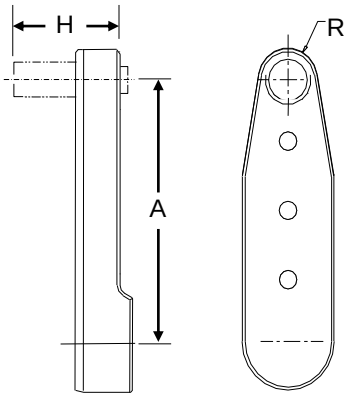

1. “R” Dimension Minimum _____ inches.
2. “B” Minimum Clearance over Pin _____ inches.
3. Diameter of the EN nut (-5, -6, -8, -10, -12, -14) (circle one)
5. “A” Maximum and Minimum Offset Dimensions. Max _____ Min _____
6. “H” Maximum Height Dimension, Including Socket Max _____ inches.
7. Is an extended socket required? Yes _____, No _____, Length of socket _____

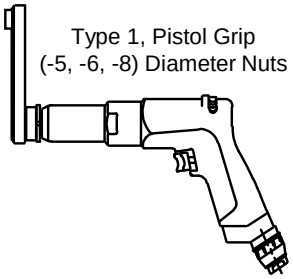

Type 1, Pistol Grip
(-5, -6, -8) Diameter Nuts

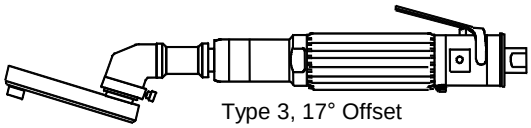

Type 3, 17° Offset
(All Diameters)

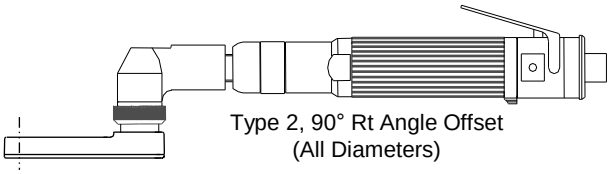

Type 2, 90° Rt Angle Offset
(All Diameters)

Type 4,
Hand Tools

8. Determine type of tool: Type 1 ____, Type 2 ____, Type 3 ____, Type 4 _____
9. Tool model number preferred: _____ (See Eddie-Bolt® 2 tools catalog)

Company Name: _____
Contact: _____
Phone: _____ FAX: _____

Return by E-Mail glenn.anderson@Howmet.com or FAX: (714) 871-4821

HOWMET AEROSPACE

Howmet Fastening Systems
Assembly Tool Systems Division
801 S. Placentia Avenue
Fullerton, CA USA 92831
714-278-8908 Telephone
714-871-4821 FAX

© 2024 Howmet Aerospace Inc.
Eddie-Bolt, Spline-Lok, Ergo Key and Delta-Rad are trademarks of Howmet Aerospace Inc. and/or its subsidiaries.